PART No. H9841091940

PARTS CATALOG

S6R-Y1TAA1

Diesel Engine

Engine Serial No.15712-UP

HITACHI

silverhorn.co.uk

HITACHI GENUINE PARTS

"HITACHI GENUINE PARTS" should be used exclusively for servicing your Hitachi engine.

"HITACHI GENUINE PARTS" are superior and reliable because they have been produced under the excellent quality-control system, and have passed the strict inspections.

Imitation parts are not reliable from the viewpoints of their material and manufacturing method which are entirely incomparable with those of genuine parts.

A large assortment of "HITACHI GENUINE PARTS" is always available at any of our authorized dealers, so do your ordering at your nearest dealer by specifying "HITACHI GENUINE PARTS".

silverhorn.co.uk

August 2002
Pub.No.H9841091940

GUIDE FOR USE OF PARTS CATALOGUE

1. This Parts Catalogue contains complete lists of parts for the following Hitachi S6R-Y1TAA1 basic engines.

2. This Parts Catalogue applies to the engines whose serial numbers are 15712 and up.

3. When ordering parts, give the Hitachi dealer or distributor the following information:
   (1) Part number (or assembly number) and part name.
   (2) Quantity required
   (3) Model and serial number

   NOTE: In case where the ordered parts happen to be out of stock, substitute parts (interchangeable with those ordered) will be supplied.

4. Indication of assembled bolts with washer
   Of the standard bolts, those with washers are identified by the symbol "B/W" in the Description column of each list. (Part Name: BOLT,W/WASHER)
   For the part numbers of the bolts and washers and those of bolts with washers, refer to the listing (beginning with the page D1) at the end of this parts catalogue. These bolts and washers should be ordered individually.

5. Indication of combination for replace ability -"G"-
   The new part to be used in combination with the other part in place of an old part is indented by the symbol "G" in the interchangeability code column of each list.
   For the parts to be combined, refer to the listing (beginning with the page E1) at the end of the parts catalogue.

6. For the numerical index, refer to the page beginning with C1 at the end of this parts catalogue.

7. The parts and part numbers are subject to change without prior notice.

silverhorn.co.uk

SAMPLE OF PARTS CATALOGUE

GROUP NUMBER → 07-01 クランクケース アセンブリ CRANKCASE ASSY ← GROUP NAME

Model type

Not applicable to the model of this column

Applicable to serial No. shown on cover and up if blank.

見出番号 REF. -NO.		部品番号 PART NO.	代替 R/P	変順 SEQ	記号 CNG	部品名称および記事・仕様記号 PART NAME & DESCRIPTION		型式個数 MODEL&QTY MP-T	MP-TA	MP-TA				適用号機 APLICABLE SERIAL NO. FROM@-	-@UPTO	管区 MR	新規 VRD
1		H32507-70010				CRANKCASE ASSY		1		1							
1	01	HF2846-14000				PIN,DOWEL		4	·	·						A	
1	02	H32507-01400				WASHER		14	14	14						A	
1	03	*				CAP,MAIN BEARING		6	6	6							
1	04	*				CAP,MAIN BEARING		1	1	1							
1	05	*				CRANKCASE		1	1	1							
2		H32507-02500			C	HANGER	B10,B13	1	1	1					-11285		
		H32507-02700	N	1		HANGER	B10,B13	1	1	1				11286-			V
3		H32507-04100			Q	SHIM	T=0.5	2	·	·					@11294		
		H32507-04100		1		SHIM	T=0.5	3	3	3				11295@			
4		HF1805-10025				BOLT,W/WASHER	B/W	2	2	2						A	

See(8)-(a)Description codes

Quantity per unit

Part not to be supplied See(3)

See(8)-(c)Specification codes

Applicable from serial No. indicated.

High-demand part. See(11)

See(8)-(b)Description

Applicable from 11295 (Scheduled)if suffixed with @ and sometimes differs from real serial No.

Part newly changed or added.See(12)

See(2)Reference number.

See(6)Change codes.

Applicable up to 11294 (Scheduled)if prefixed with @ and sometimes differs from real serial No.

See(4)Interchangeability codes.

See(5)Sequence-of-change numbers.

Applicable up to serial No. indicated.

NOTE: Some of model designations, number of variations and serial numbers, indicated above, are quoted from other parts catalogues.
Read these items of information as those for this parts catalogue.

NOTE: For the description of each item, refer to the pages which follow.

silverhorn.co.uk

HOW TO USE THIS PARTS CATALOGUE (to be referred to together with the former SAMPLE OF PARTS CATALOGUE)

(1)

01 CYLINDER HEAD

—3—

REF. -NO.	PART NO.	R/P	SEQ	CMG	PART NAME & DESCRIPTION	MODEL & QTY Y1TAA1			APPLICABLE SERIAL NO. FROM@-	-@UPTO	M/R	V/RD
1	H3750137011			C	HEAD ASSY,CYLINDER	6				-16360		
	H3750137012	R	1	C	HEAD ASSY,CYLINDER	6				-16360		V
	H3750105050	N	2		HEAD ASSY,CYLINDER	6			16361-			V
2	*				HEAD SUB ASSY,CYL	6						
2 01	H0482622500				CAP,SEALING	6						
(2)	(3)	(4)	(5)	(6)	(7) (8)	(9)			(10)	(11)	(12)	

(1) Compiling system

The systems of a unit are grouped according to their location in the unit.. The groups, each identified by group number, are listed in the order by CONTENTS. Each group is preceded by an "exploded view" which clearly illustrates each part in its correct relation to the other parts in the illustration.

(2) Reference number

Abbreviated to "REF. No., "this number is used to located a part in the illustration. in cases where the reference number is of three to four figures, the first and second figures show the reference number of an assembly, and the last two figures show the numbers of its component parts.

(3) Part numbers

The part numbers shown in this parts catalogue are those assigned to genuine Hitachi parts.

NOTE : Parts with asterisk (*) are not supplied individually.

silverhorn.co.uk

(4) Interchangeability codes

This interchangeability codes used in this parts catalogue are as follows:

PART NO.	Code (R/P)	DESCRIPTION
A(Old) B(New)	R	B(new part) and A(old part) are mutually interchangeable
A(Old) B(New)	1	A(Old part) is not supplied.B(new part) can be substituted for A(Old part).
A(Old) B(New)	3	B(new part) can be substituted for A(old part). [A(old part) cannot be substituted for B(new part).]
A(Old) B(New)	N	B(new part) and A(old part) are not interchangeable.
A(Old) B(New)	G	B(new part) can be substituted for A(old part) in combination with other part(s). (For the parts to be combined, refer to the listing beginning with the page E1 at the end of this parts catalogue.)

(5) Sequence-of-change numbers

The parts are changed for improved quality or performance. Their changes are indicated in sequence by numerals (1. 2. 3…)

Blank : Original

1 : 1st change

2 : 2nd change

3 : 3rd change

(6) Change codes

These codes indicate the reason or purpose of changes of the parts.

A : Added part (a part entered into service)

C : Change of part number

D : Deleted part (a part applicable up to the serial no. expressed in Serial No. column)

E : Added part except above reasons

Q : Change of quantity

silverhorn.co.uk

(7) Part name

Abbreviations are sometimes used. For the abbreviations, refer to TABLE OF SYMBOLS & ABBREVIATIONS appeared in hide pages of this general information chapter.

NOTE: The location terms L.H (left hand) and R.H (right hand) are as these directions viewed from the flywheel side of an engine.

(8) Description & specification codes

(a) Description codes (expressed in the first part of Description column).

B/W: Assembled bolt (with washer)

KIT: Part supplied as a kit

STD: Standard part

OPT: Optional part

AR : Part used, as required or by selection or in adjusted quantity for necessity

SFN: Semi-finished part

(b) The Description codes in above paragraph (a) are followed by supplementary explanation such as dimensions (thickness, length, etc.) ,manufacturer part number, manufacturer name, etc. as occasion demands.

NOTE: Unless otherwise indicated, the dimensions are shown in millimeter and the name of unit is abbreviated.

(Examples) Thickness:T=1.00 Length:L=1000

Width:W=1500 Height:L=500

(c) Specification codes

Each specification or type of model and/or selective specifications of a unit are indicated by codes of three figures. For these codes, refer to LIST OF SPECIFICATION CODES appeared in hind pages of this general information chapter.

NOTE: Unless indicated by the specification codes, the parts may be used for the products of all specifications.

(Examples) A10:For diesel fuel

B10:With industrial electric starter

silverhorn.co.uk

(d) The parts indicated as "NOT SHOWN", such as component parts of overhaul gasket kit, are not shown in the illustration.

(9) Model & quantity

(a) Model : Model, type, specification, destination, etc. of product to which a parts catalogue applies are indicated in the title column of each variation.

(b) Quantity :Quantity of part or assembly and its component parts required for one unit of product is indicated.

NOTE：In case "AR" appears in QTY column, it is required to adjust quantity for use.

(10) Applicable serial numbers

Applicable serial numbers of engine are indicated in the "UPTO" or "FROM" column. Serial numbers with "@" are scheduled ones and sometimes differ from the real serial numbers. If the "FROM " column is blank, the part is applicable to serial number shown on this cover and up.

(11) Management rank

Parts ranked as "A" are high-demand parts. This ranking is to be referred to by dealers, and is devised to facilitate and rationalize their distribution, stocking and inventory of the parts.

(12) Parts changed or added after the last parts list that has been published are identified by "V".

silverhorn.co.uk

TABLE OF SYMBOLS & ABBREVIATIONS

SYMBOL	DESCRIPTION	
ACCEL	ACCELERATOR	
ADJ	ADJUSTING (ADJUSTABLE)	
AIR-CON	AIR-CONDITIONER	
ASSY	ASSEMBLY	
ATT	ATTACHMENT	
AUTO	AUTOMATIC	
AUX	AUXILIARY	
AR	AS REQUIRED	
BATT	BATTERY	
BRG	BEARING	
B/PMP	BILGE PUMP	
BRKT	BRACKET	
BUSH	BUSHING	
CARB	CARBURETOR	
C/L	CENTERLINE	
COMPR	COMPRESSOR	
CON-ROD	CONNECTING-ROD	
C/MBR	CROSS-MEMBER	
CYL	CYLINDER	
DIA	DIAMETER	
DIFF	DIFFERENTIAL	
DISTR	DISTRIBUTOR	
DR	DRIVE	
D=	OUT DIAMETER	

SYMBOL	DESCRIPTION	
ELEC	ELECTRIC	
ENG	ENGINE	
EQUIP	EQUIPMENT	
EXH	EXHAUST	
E/TNK	EXPANSION TANK	
FITT	FITTING	
FLEX	FLEXIBLE	
FR	FRONT	
GSKT	GASKET	
GEN	GENERATOR	
GOV	GOVERNOR	
G/N	GROUP NUMBER	
H/EXCH	HEAT EXCHANGER	
HEX	HEXAGON	
HYD	HYDRAULIC	
H=	HEIGHT	
IND	INDUSTRIAL	
INJ	INJECTION	
INSTAL	INSTALLATION	
INST	INSTRUMENT	
INTLK	INTERLOCK	
JUNC	JUNCTION	
KD	KNOCKDOWN	
L.H	LEFT HAND	
LUB	LUBRICATION	
L=	LENGTH	

silverhorn.co.uk

TABLE OF SYMBOLS & ABBREVIATIONS

SYMBOL	DESCRIPTION	
MANF	MANIFOLD	
MAX	MAXIMUM	
MIN	MINIMUM	
MTR	MOTOR	
MTG	MOUNTING	
NO.	NUMBER	
OPT	OPTION	
O/D	OVER DRIVE	
O.S	OVERSIZE	
PTO	POWER TAKE-OFF	
P/S	POWER STEERING	
PRESS	PRESSURE	
P/N	PART NUMBER	
QTY	QUANTITY	
RAD	RADIATOR	
RE	REAR	
REG	REGULATOR	
REV	REVERSE	
R.H	RIGHT HAND	
REF.NO.	REFERENCE NUMBER	
R/N	REFERENCE NUMBER	
S/PMP	SEA WATER PUMP	
SECT	SECTION	
S/MBR	SIDEMEMBER	
STD	STANDARD	
SUPT	SUPPORT	

SYMBOL	DESCRIPTION	
SYM	SYMBOL	
SYNCH	SYNCHRONIZER	
SYS	SYSTEM	
TEMP	TEMPERATURE	
TERM	TERMINAL	
T/CONV	TORQUE-CONVERTER	
T/F	TRANSFER	
T/M	TRANSMISSION	
T/HSG	TURBINE-HOUSING	
T/C	TURBOCHARGER	
T=	THICKNESS	
U/BODY	UNDERBODY	
U.S	UNDERSIZE	
UNIV	UNIVERSAL	
VAC	VACUUM	
VENT	VENTILATOR	
W/STRIP	WEATHERSTRIP	
W/	WITH	
W/O	WITHOUT	
W/W	WOODWARD	
W/PMP	WATER PUMP	
W=	WIDTH	
Z=	NUMBER OF GEAR TEETH	

silverhorn.co.uk

TABLE OF SYMBOLS & ABBREVIATIONS

SYMBOL	DESCRIPTION		SYMBOL	DESCRIPTION	
1ST	FIRST				
2ND	SECOND				
3RD	THIRD				
4TH	FOURTH				
5TH	FIFTH				
&	AND				
@	UNCONFIRMED				
*	PART NOT TO BE SUPPLIED				

silverhorn.co.uk

TABLE OF MAKER'S NAME

BAS or(または) ZXL	Bosch Automotive Systems Corp. (OLD：Zexel Corp.)	MEC	Mitsubishi Electric Corp.
		SEC	Sawafuji Electric Co., Ltd.
DEN or(または) NDC	DENSO Corp. (OLD：Nippondenso Co., Ltd.)	MPC	Mikuni Precision Co., Ltd.
NCC	Niigata Converter Co., Ltd.	W/W	Woodward Governor(JAPAN), Ltd.
NKC	Nikko Electric Industry Co., Ltd.		

silverhorn.co.uk

CONTENTS

GROUP NO.	GROUP NAME	PAGE
01	CYLINDER HEAD	2
04	VALVE MECHANISM & ROCKER COVER	4
05	CAMSHAFT	6
07-01	CRANKCASE ASSY	8
07-02	CRANKCASE	10
11	TIMING GEAR CASE	14
13	OIL PAN	16
14	ENGINE MOUNTING	18
17	PISTON & CONNECTING-ROD	20
20	CRANKSHAFT,FLYWHEEL & DAMPER	22
23	TIMING GEAR	24
25-01	ACCESSORY DRIVE(FRONT)	26
25-02	ACCESSORY DRIVE(REAR)	28
30	INLET SYSTEM	30
32	EXHAUST SYSTEM	34
33	TURBOCHARGER(MODEL TD13M-48QRC-40)	36
35	OIL PUMP	38
36-01	OIL STRAINER	40
36-02	OIL PIPE(PART-1)	42
36-03	OIL PIPE(PART-2)	44
39	OIL COOLER	46
40	OIL FILTER	48
42	OIL FILLER & LEVEL GAGE	50

silverhorn.co.uk

GROUP NO.	GROUP NAME	PAGE
43	BREATHER	52
45	WATER PUMP	54
46-01	THERMOSTAT & WATER HEATER	56
46-02	COOLING SYSTEM(PART-1)	58
46-03	AUTO TENSIONER	60
48	FAN DRIVE	66
61-01	FUEL INJECTION PUMP BRACKET	68
61-02	FUEL SYSTEM	70
61-03	NOZZLE ASSY(SPRAY HOLE DIAMETER:0.31MM)	72
61-04	INJECTION PUMP	74
61-05	FEED PUMP	80
61-06	FUEL LEAK-OFF PIPE	82
62-01	FUEL FILTER PIPING	84
62-02	FUEL FILTER ASSY	86
63	ACTUATOR CONTROL	88
66	STARTER (24V-7.5KW)	92
68-01	ALTERNATOR GENERAL	94
68-02	ALTERNATOR (24V-80A)	96
71	TURNING GEAR	98
87	STOP SYSTEM	100
90-01	INSTRUMENT	102
90-02	ALARM SWITCH	104
91	TOOLS(STD)	106

silverhorn.co.uk

GROUP NO.	GROUP NAME	PAGE
94-01	OVERHAUL GASKET KIT(PART-1)	108
94-02	OVERHAUL GASKET KIT(PART-2)	110
94-03	OVERHAUL GASKET KIT(PART-3)	114
94-04	OIL SEAL KIT	116
	NUMERICAL PARTS INDEX	C1

silverhorn.co.uk

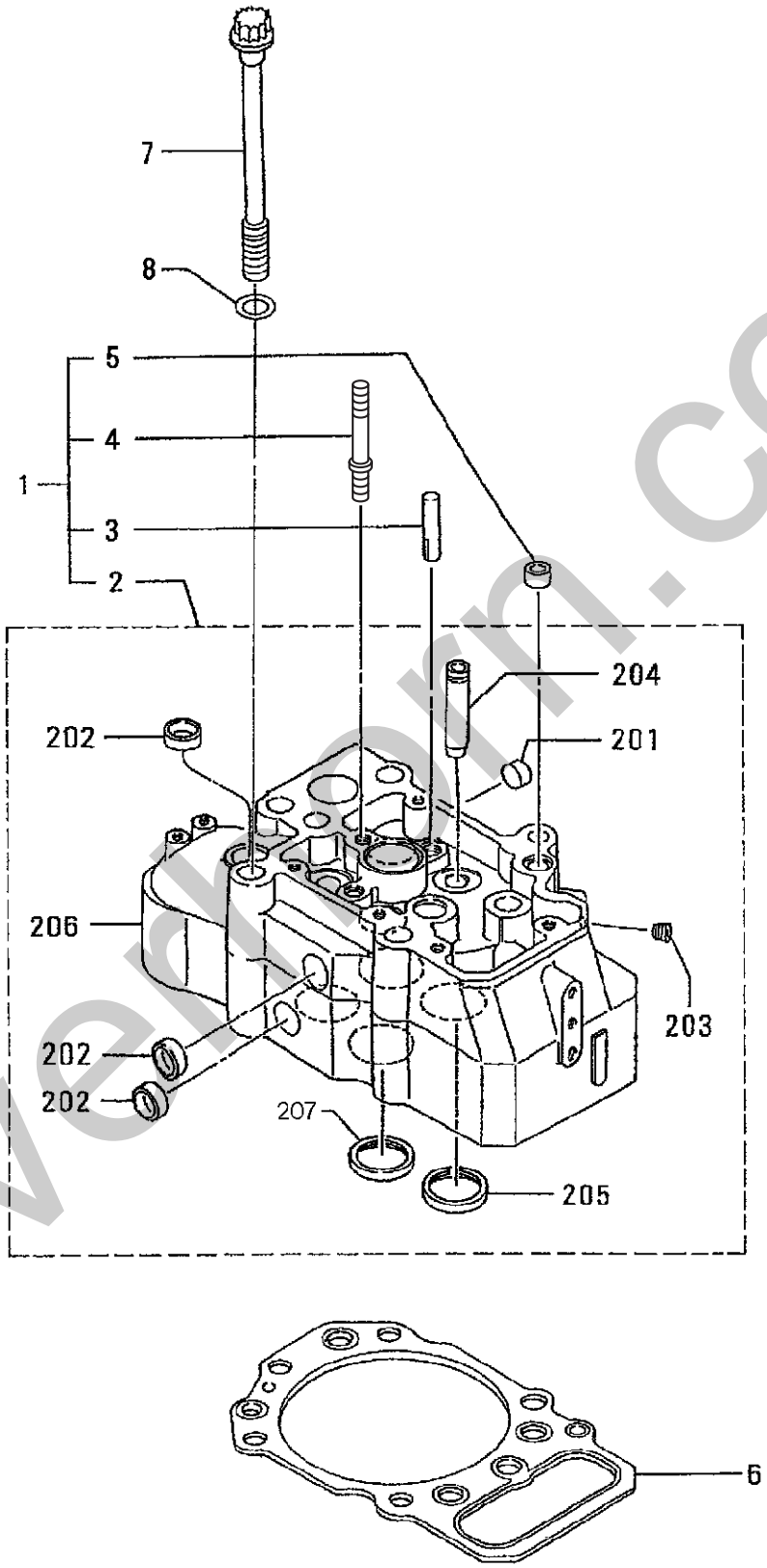

silverhorn.co.uk

01 CYLINDER HEAD

REF. -NO.	PART NO.	R/P	SENQG	PART NAME & DESCRIPTION	MODEL & QTY Y1TAA1			APPLICABLE SERIAL NO. FROM@-	-@UPTO	M/R	VRD
1	H3750137011		C	HEAD ASSY,CYLINDER	6				-16360		
	H3750137012	R1	C	HEAD ASSY,CYLINDER	6				-16360		V
	H3750105050	N2		HEAD ASSY,CYLINDER	6			16361-			V
2	*			HEAD SUB ASSY,CYL	6						
201	H0482622500			CAP,SEALING	6						
202	H0482622800			CAP,SEALING	42						
203	H0482771000			PLUG,TAPERED	6					A	
204	H3710110600			GUIDE,VALVE	24						
205	H3750103101			SEAT,VALVE EXHAUST	12						
206	*			HEAD,CYLINDER	6						
207	H3750107500		C	SEAT,VALVE INLET	12						
	H3750107501	R1		SEAT,VALVE INLET	12						V
3	H3350113400			GUIDE,BRIDGE	12						
4	H3750117600		C	STUD,NOZZLE GLAND	6				-16360		
	H3750111400	N1		STUD,NOZZLE GLAND	6			16361-			V
5	H3750101501			PIN,DOWEL	6					A	
6	H3750102201			GASKET,CYLINDER HEAD	6						
7	H3750112501			BOLT,CYLINDER HEAD	36						
8	H3370711701			WASHER	36					A	

silverhorn.co.uk

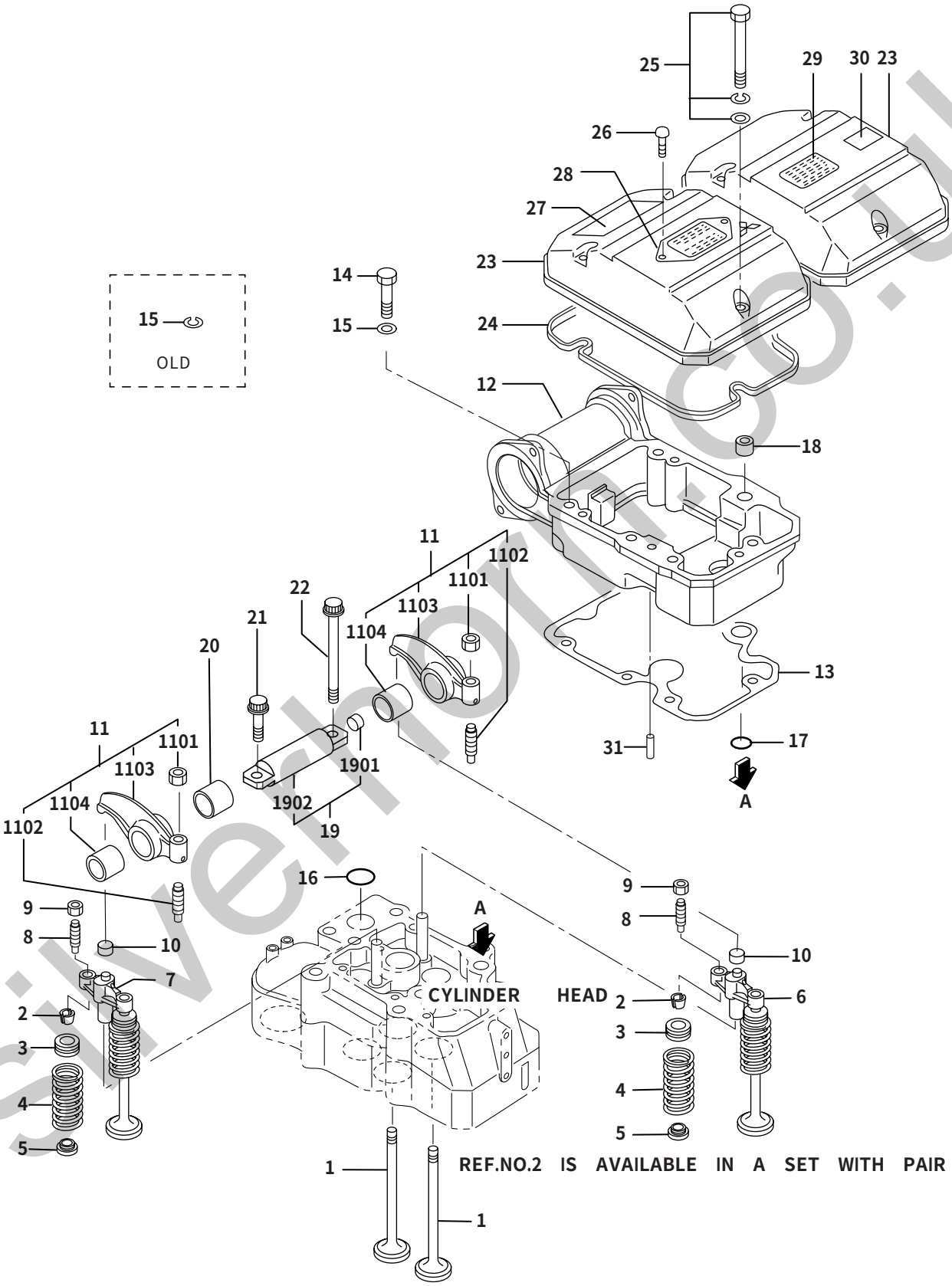

silverhorn.co.uk

REF. -NO.	PART NO.	R/P	SENQG	PART NAME & DESCRIPTION		MODEL & QTY Y1TAA1			APPLICABLE SERIAL NO. FROM@-	-@UPTO	M/R	VRD
1	H3750430200			VALVE		24						
2	H3250400400			COTTER		48					A	
3	H3750400300			ROTATOR		24						
4	H3750410400			SPRING,VALVE		24					A	
5	H3350410300			SEAL,VALVE STEM		24					A	
6	H3750413100			BRIDGE,EXHAUST		6						
7	H3750413200			BRIDGE,INLET		6						
8	H3710413300			SCREW,ADJUSTING		12						
9	HF230510000			NUT		12					A	
10	H3000424302			CAP		12						
11	H3750422012			ROCKER ASSY,EXH		12						
1101	HF230512000			NUT,LOCK		12					A	
1102	H3710402800			SCREW,ADJUSTING		12					A	
1103	*			ROCKER,EXH		12						
1104	H3750432500			BUSHING,ROCKER		12						
12	H3750431100		C	CASE,ROCKER		6				-20516		
	H3750441100	31		CASE,ROCKER		6						
13	H3750421200			PACKING,ROCKER CASE		6					A	
14	HF103512085			BOLT		30					A	
15	HF251512000		C	WASHER		30				-16360	A	
	H3752507900	31		WASHER		30						
16	HF315304000		C	O-RING		6				-17184	A	
	H3750402300	31		O-RING		6					A	V
17	H0550710200			O-RING		6					A	
18	H3750101501			PIN,DOWEL		6					A	
19	H3750444010			SHAFT ASSY,ROCKER		6					A	
1901	H0482621000			CAP,SEALING		6						
1902	*			SHAFT,ROCKER		6						
20	H3750404201			SPACER		6						
21	HMH000854			BOLT,FLANGE		6						
22	H3750414600			BOLT		6						
23	H3750416100		C	COVER,ROCKER		6				-16396		
	H3750426200	31		COVER,ROCKER		6			16397-			V
24	H3750456200		C	O-RING,ROCKER COVER		6				-16360		
	H3750411900	N1		O-RING,ROCKER COVER		6			16361-			V
25	HF182510065			BOLT,W/WASHER	B/W	18					A	
26	H0066504048			RIVET,SCREW		4					A	
27	H3259300300			PLATE,CAUTION		1						
28	*			PLATE,CAUTION		1						
29	H3759302100			LABEL,EMISSION		1						
30	*		A	LABEL,EMISSION		1						V
31	HF284606000		A	PIN,DOWEL		6			20517-		A	V

silverhorn.co.uk

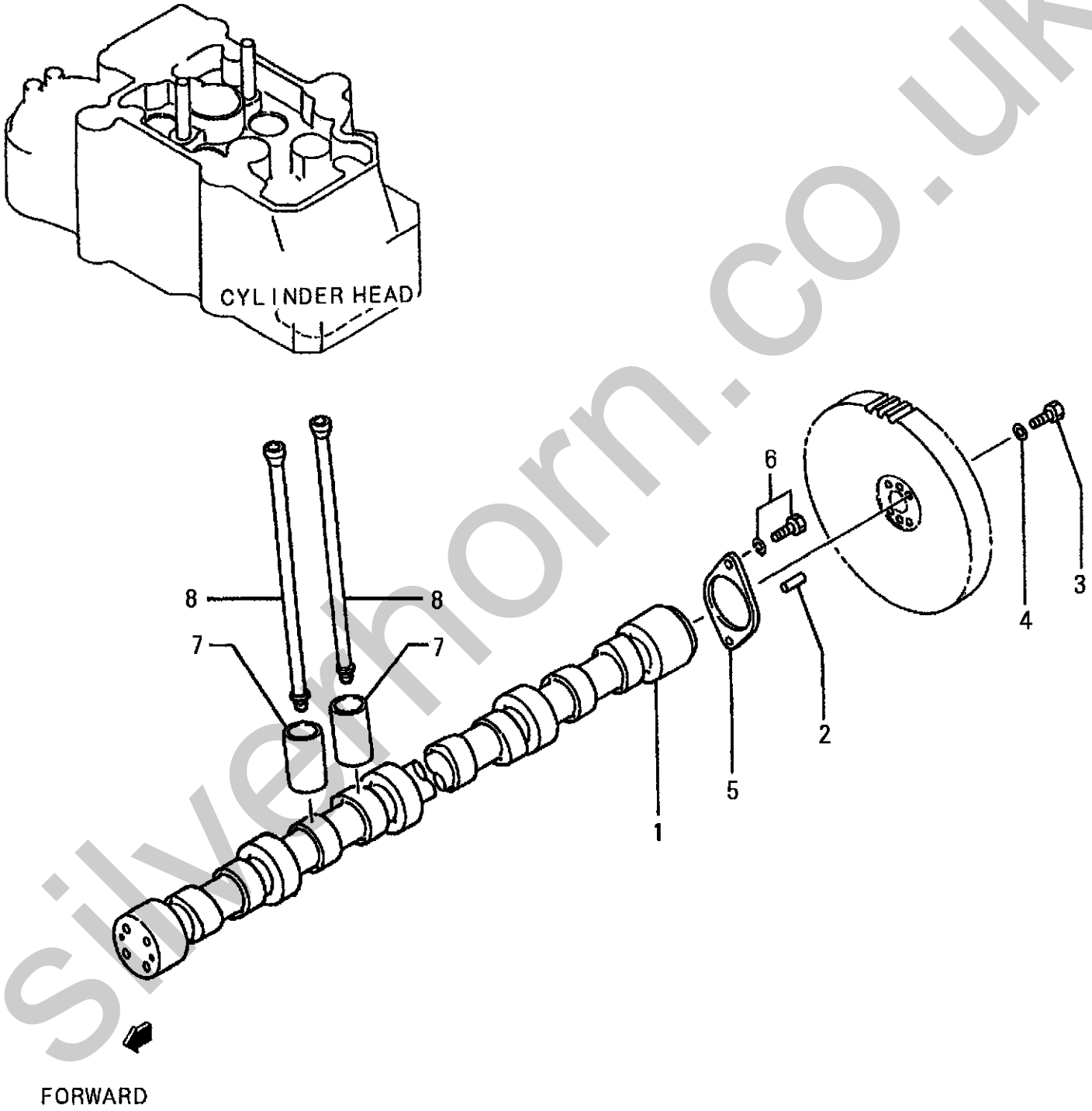

silverhorn.co.uk

REF. -NO.	PART NO.	R/P	SENQG	PART NAME & DESCRIPTION		MODEL & QTY Y1TAA1			APPLICABLE SERIAL NO. FROM@-	-@UPTO	M/R	VRD
1	H3750504200		C	CAMSHAFT		1				-16889		
	H3750504201	R	1C	CAMSHAFT		1				-16889		
	H3750524200	N	2	CAMSHAFT		1			16890-			V
2	HF284612000			PIN,DOWEL		2					A	
3	H3752507800		C	BOLT		4				-16889		
	H3752529300	N	1	BOLT		6			16890-			V
4	H3752507900		C	WASHER		4				-16889		
	H3752519400	N	1D	WASHER		6			16890-	-16905		V
5	H3750510800			PLATE		1						
6	HF180512030			BOLT,W/WASHER	B/W	2					A	
7	H3750531100			TAPPET		12						
8	H3750513200		C	ROD,PUSH		12				-16919		
	H3750503300	3	1	ROD,PUSH		12						V

silverhorn.co.uk

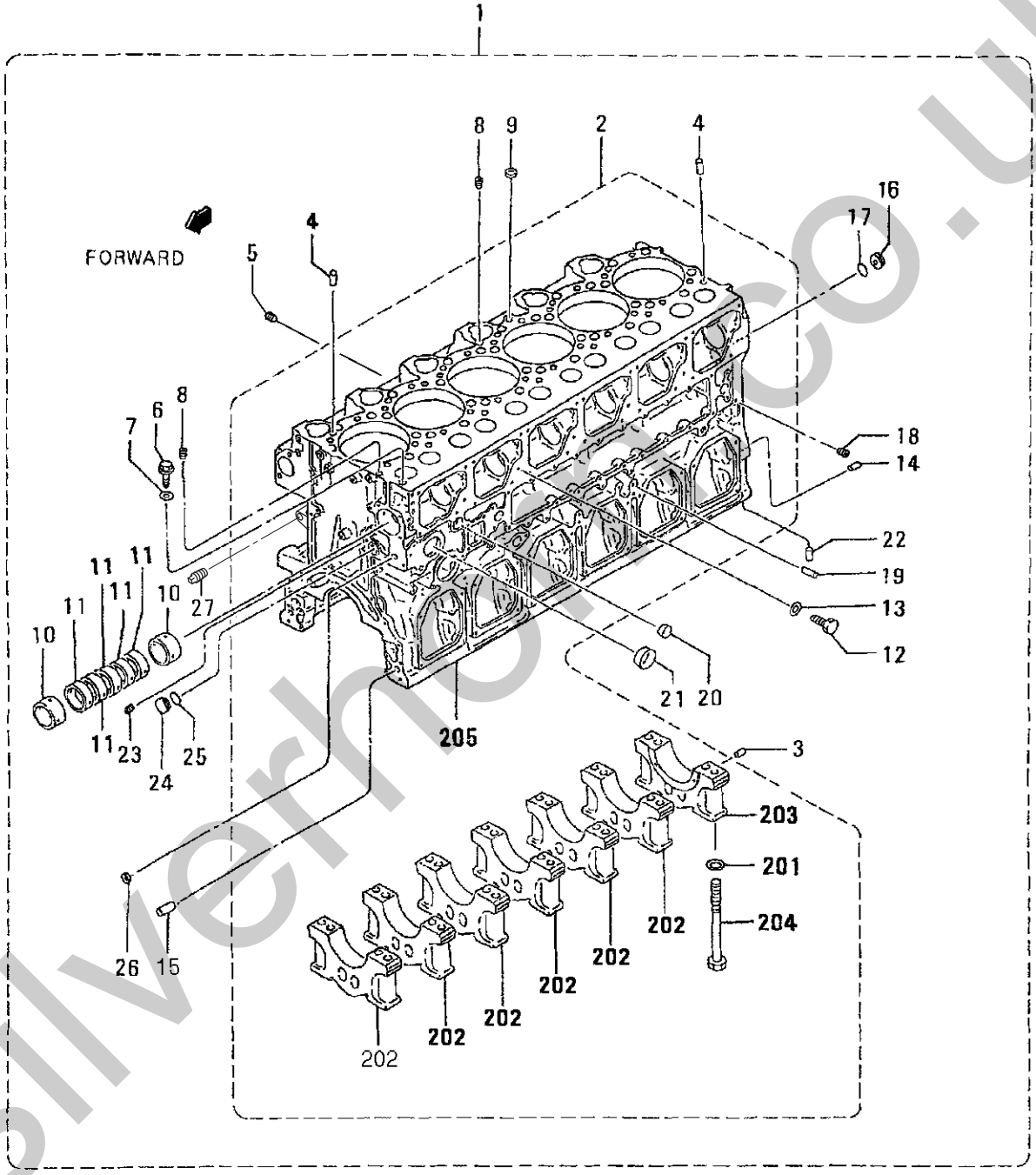

silverhomes.co.uk

07-01 CRANKCASE ASSY

REF. -NO.	PART NO.	R/P	SENQG	PART NAME & DESCRIPTION	MODEL & QTY Y1TAA1			APPLICABLE SERIAL NO. FROM@-	-@UPTO	M/R	VRD
1	*		C	CRANKCASE ASSY	1						
	H3750700020	11	C	CRANKCASE ASSY	1				-16569		
	H3750700021	32		CRANKCASE ASSY	1						V
2	*			CRANKCASE SUB ASSY	1						
201	H3370711701			WASHER	28					A	
202	*			CAP,METAL	6						
203	*			CAP,METAL	1						
204	H3750731601			BOLT,METAL CAP	28					A	
205	*			CRANKCASE	1						
3	H3300702600			PIN,DOWEL	6					A	
4	H3230702600			PIN,DOWEL	12					A	
5	H0482772100			PLUG,TAPERED	1					A	
6	HF500012000			PLUG,DRAIN	1					A	
7	H0594601201			WASHER,SEALING	1					A	
8	H0482771300			PLUG,TAPERED	2					A	
9	H0482622500			CAP,SEALING	1						
10	H3750703100			BUSHING,CAMSHAFT	2						
11	H3750703200			BUSHING,CAMSHAFT	5						
12	H3750703900			BOLT,SET	7					A	
13	H0594601201			WASHER,SEALING	7					A	
14	H3750704600		C	PIN,DOWEL	2				-16569		
	HF284620000	31		PIN,DOWEL	2						V
15	H3750704600			PIN,DOWEL	2					A	
16	H3750700701			PLATE,NOZZLE	1						
17	H0550710340			O-RING	1					A	
18	H0482771300			PLUG,TAPERED	1					A	
19	HF284614000			PIN,DOWEL	2					A	
20	H0482624000			CAP,SEALING	1						
21	H3262500800			CAP,SEALING	1						
22	HF284612000			PIN,DOWEL	2					A	
23	H0482771000			PLUG,TAPERED	1					A	
24	H3260710700			PLUG	1						
25	H0550710340			O-RING	1					A	
26	H0482622000			CAP,SEALING	1						
27	HF500613000		A	PLUG,TAPERED	1			16570-			V

silverhorn.co.uk

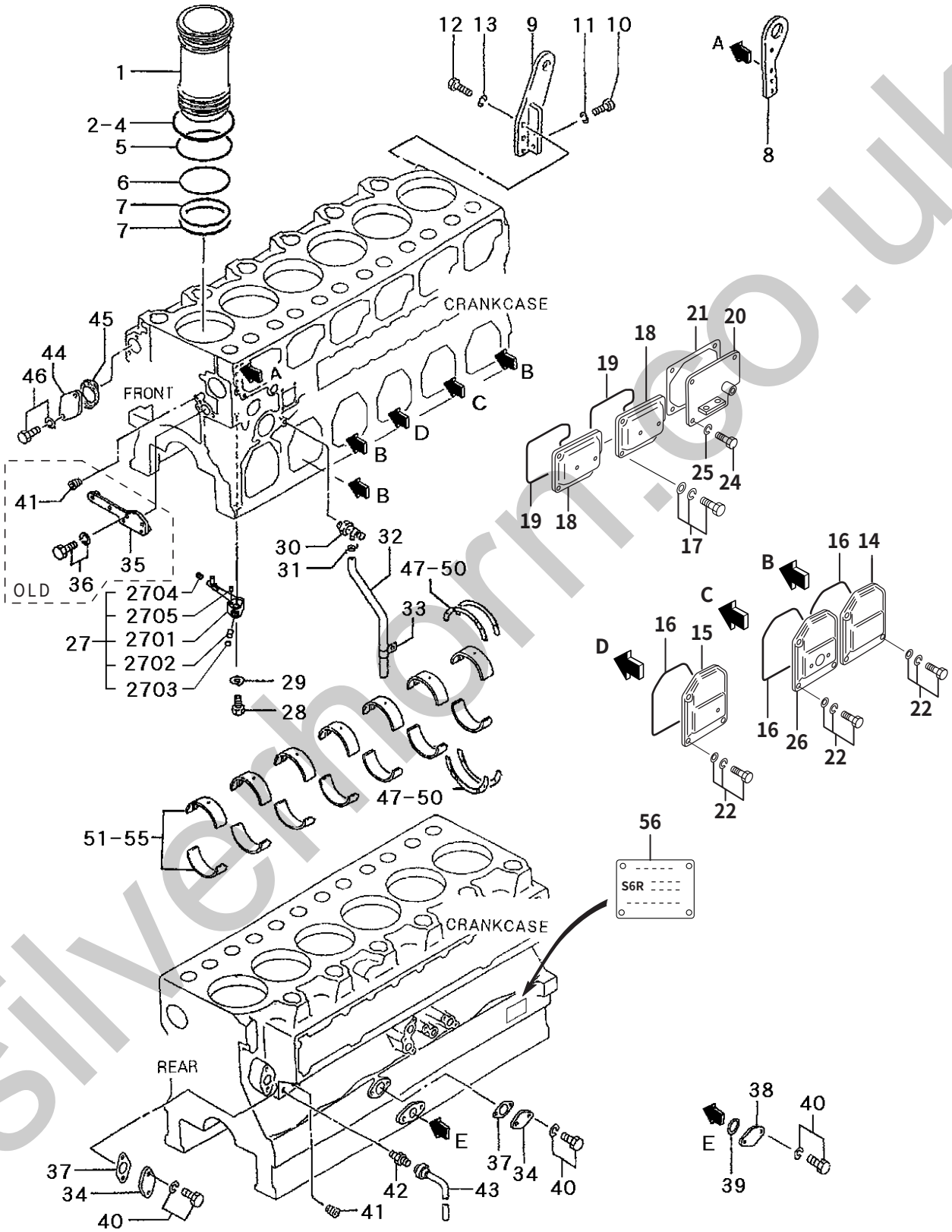

silvernorm.co.uk

REF. -NO.	PART NO.	R/P	SENQG	PART NAME & DESCRIPTION		MODEL & QTY Y1TAA1			APPLICABLE SERIAL NO. FROM@-	-@UPTO	M/R	VRD
1	*		C	LINER,CYLINDER		6						
	H3750722700	11		LINER,CYLINDER		6						
2	*		C	RING,LINER	T=0.1	AR						
	H3750712500	11		RING,LINER	T=0.1	AR						
3	*		C	RING,LINER	T=0.05	AR						
	H3750712510	11		RING,LINER	T=0.05	AR						
4	*		C	RING,LINER	T=0.15	AR						
	H3750712520	11		RING,LINER	T=0.15	AR						
5	H3750732400			O-RING,LINER		6						
6	H3710704200			O-RING,LINER		6						
7	H3710704300			O-RING,LINER		12						
8	H3750700800			HANGER,FRONT		1						
9	H3750719200			HANGER,REAR		1						
10	HF103516040			BOLT		2					A	
11	HF251516000			WASHER,SPRING		2					A	
12	HF103512035			BOLT		3					A	
13	HF251512000			WASHER,SPRING		3					A	
14	H3750717100		C	COVER,SIDE		3				-16396		
	H3750727100	31		COVER,SIDE		3			16397-			
15	H3750706900		C	COVER,SIDE		1				-16396		
	H3750716900	31		COVER,SIDE		1			16397-			
16	H3750737300		C	O-RING		5				-16360	A	
	H3750706400	N1		O-RING		5			16361-		A	
17	HF182512030			BOLT,W/WASHER	B/W	8					A	
18	H3750727801		C	COVER,CAM ROOM		2				-16396		
	H3750737800	31		COVER,CAM ROOM		2			16397-			
19	H3750737600		C	O-RING		2				-16360	A	
	H3750706500	N1		O-RING		2			16361-		A	
20	H3750706302			COVER,CAM ROOM		1						
21	H4750033100			PACKING		1					A	
22	HF182512030			BOLT,W/WASHER	B/W	17					A	
24	HF103512030			BOLT		4					A	
25	HF251512000			WASHER,SPRING		4					A	
26	H3750717200		C	COVER,SIDE		1				-16396		
	H3750727200	31		COVER,SIDE		1			16397-			
27	H3750704041		C	NOZZLE,OIL JET		6				-16396		
	H3750714040	31	C	NOZZLE,OIL JET		6				-16818		V
	H3750724040	32		NOZZLE,OIL JET		6			16819-			V
2701	H3750704401		C	BODY,NOZZLE		6				-16818		
	H3750714400	31		BODY,NOZZLE		6						V
2702	H3111912201			VALVE,CHECK		6					A	
2703	HF501410000			CAP,SEALING		6					A	
2704	H0595004006			SCREW,SET		6						
2705	HF284606000			PIN,DOWEL		6					A	
28	H3770708500			BOLT,EYE		6						
29	H3620708900			SPRING,CONICAL DISK		6					A	
30	H3340706100			COCK,WATER DRAIN		1						
31	H3000705500			CLAMP		1					A	
32	HF400212120			TUBE,VINYL		1					A	

silverhorn.co.uk

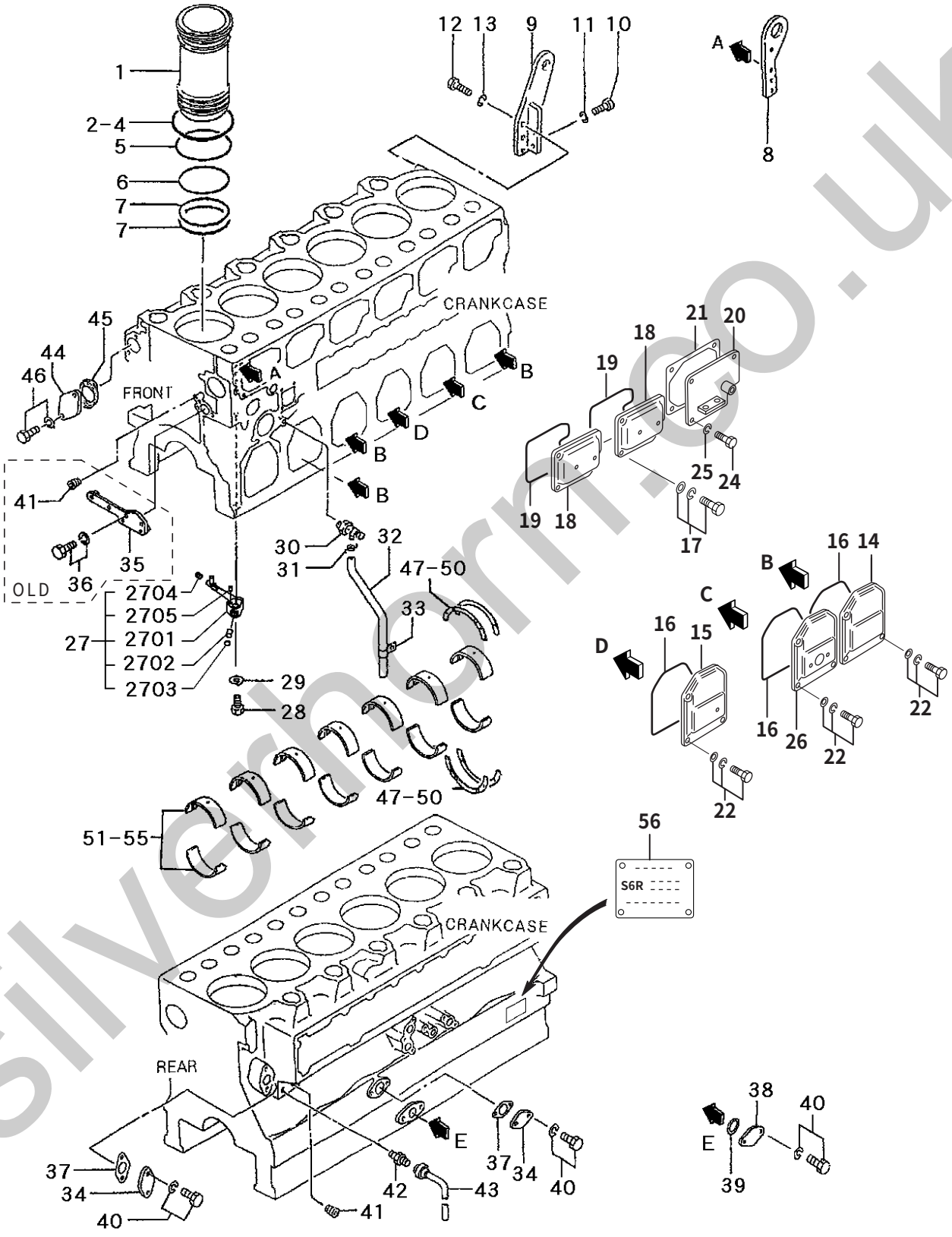

silverhorn.co.uk

REF. -NO.	PART NO.	R/P	SENQG	PART NAME & DESCRIPTION		MODEL & QTY Y1TAA1			APPLICABLE SERIAL NO. FROM@-	-@UPTO	M/R	VRD
33	H3253605500			CLAMP		1					A	
34	H3354606900			COVER		2						
35	H3754518700		D	PLATE,TENSION		1				-16396		
36	HF180512025		D	BOLT,W/WASHER	B/W	3				-16396	A	
37	H3254636800		C	GASKET		2				-16863	A	
	H35B3602900	31		GASKET		2						
38	H3750706700			COVER		1						
39	H0550720400			O-RING		1					A	
40	HF180512025			BOLT,W/WASHER	B/W	6					A	
41	HF500510001		D	PLUG,TAPERED		2				-16396	A	
42	HF454006300			CONNECTOR		1						
43	H4595430100			PIPE,DRAIN		1						
44	H3750719100			COVER		1						
45	H3755510600			GASKET		1					A	
46	HF180512025			BOLT,W/WASHER	B/W	2					A	
47	H3750938100			PLATE,THRUST	STD	4					A	
48	H3750938200			PLATE,THRUST	O.S 0.25	4						
49	H3750938300			PLATE,THRUST	O.S 0.50	4						
50	H3750938400			PLATE,THRUST	O.S 0.75	4						
51	H3750950010			METAL SET,MAIN	STD	7					A	
52	H3750950020			METAL SET,MAIN	U.S 0.25	7					A	
53	H3750950030			METAL SET,MAIN	U.S 0.50	7					A	
54	H3750950040			METAL SET,MAIN	U.S 0.75	7					A	
55	H3750950050			METAL SET,MAIN	U.S 1.00	7					A	
56	H3759300300		C	PLATE,NAME		1				-16902		
	H3759310300	31		PLATE,NAME		1						V

silverhorn.co.uk

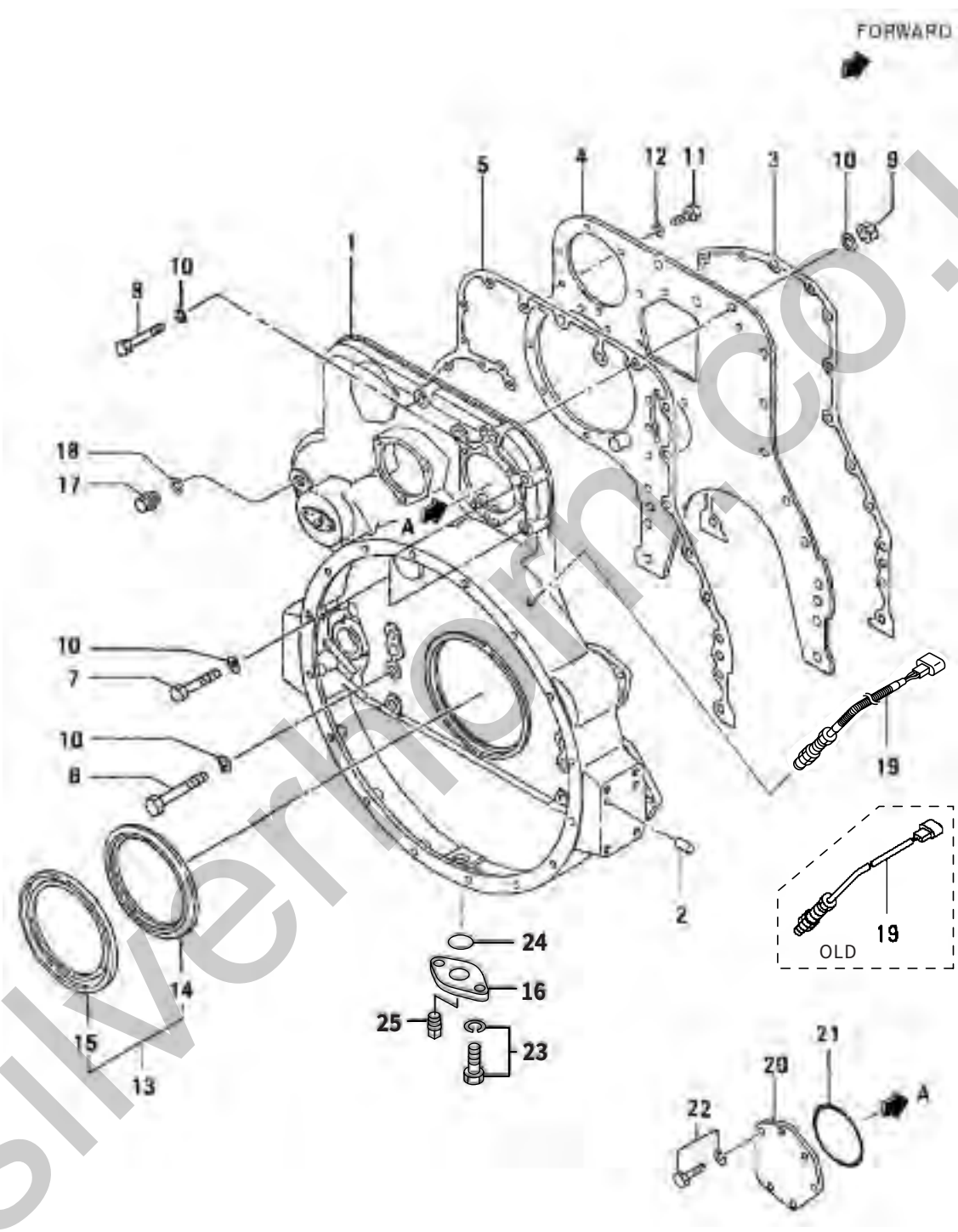

silverhorn.co.uk

11 TIMING GEAR CASE

REF. -NO.	PART NO.	R/P	SENQG	PART NAME & DESCRIPTION		MODEL & QTY Y1TAA1			APPLICABLE SERIAL NO. FROM@-	-@UPTO	M/R	VRD
1	H3751160100		C	CASE,TIMING GEAR		1						
	H3751160102	R	1	CASE,TIMING GEAR		1						
2	HF284614000			PIN,DOWEL		4					A	
3	H3751120200			PACKING		1					A	
4	H3751150300			PLATE,REAR		1						
5	H3751120400			PACKING		1					A	
6	H0597816125			BOLT		9					A	
7	HF103516085			BOLT		3					A	
8	HF103516080			BOLT		2					A	
9	HF230016000			NUT,LOCK		2					A	
10	H3120171800			WASHER		14					A	
11	HF103512030			BOLT		7					A	
12	HF251512000			WASHER,SPRING		7					A	
13	H3751104000			SEAL ASSY,OIL		1						
14	H3711114200			SLINGER		1						
15	H3751104300			SEAL,OIL		1					A	
16	H3771102200		C	FLANGE		1				-16306		
	H3771112200	N	1	FLANGE		1			16307-			V
17	HF500024000			PLUG,DRAIN		1					A	
18	H0594602401			WASHER,SEALING		1					A	
19	H0441043400		C	PICKUP		2				-16360	A	
	H0441044200	3	1	PICKUP		2						V
20	H3251111300			COVER		1					A	
21	H0550721250			O-RING		1						
22	HF180510020			BOLT,W/WASHER	B/W	6					A	
23	HF180512025		C	BOLT,W/WASHER	B/W	2				-16306	A	
	HF180512035	N	1	BOLT,W/WASHER	B/W	2			16307-			V
24	H0550710480			O-RING		1					A	
25	HF500617000		C	PLUG,TAPERED		1				-16306	A	
	HF500633000	N	1	PLUG,TAPERED		1			16307-			V

silvermorn.co.uk

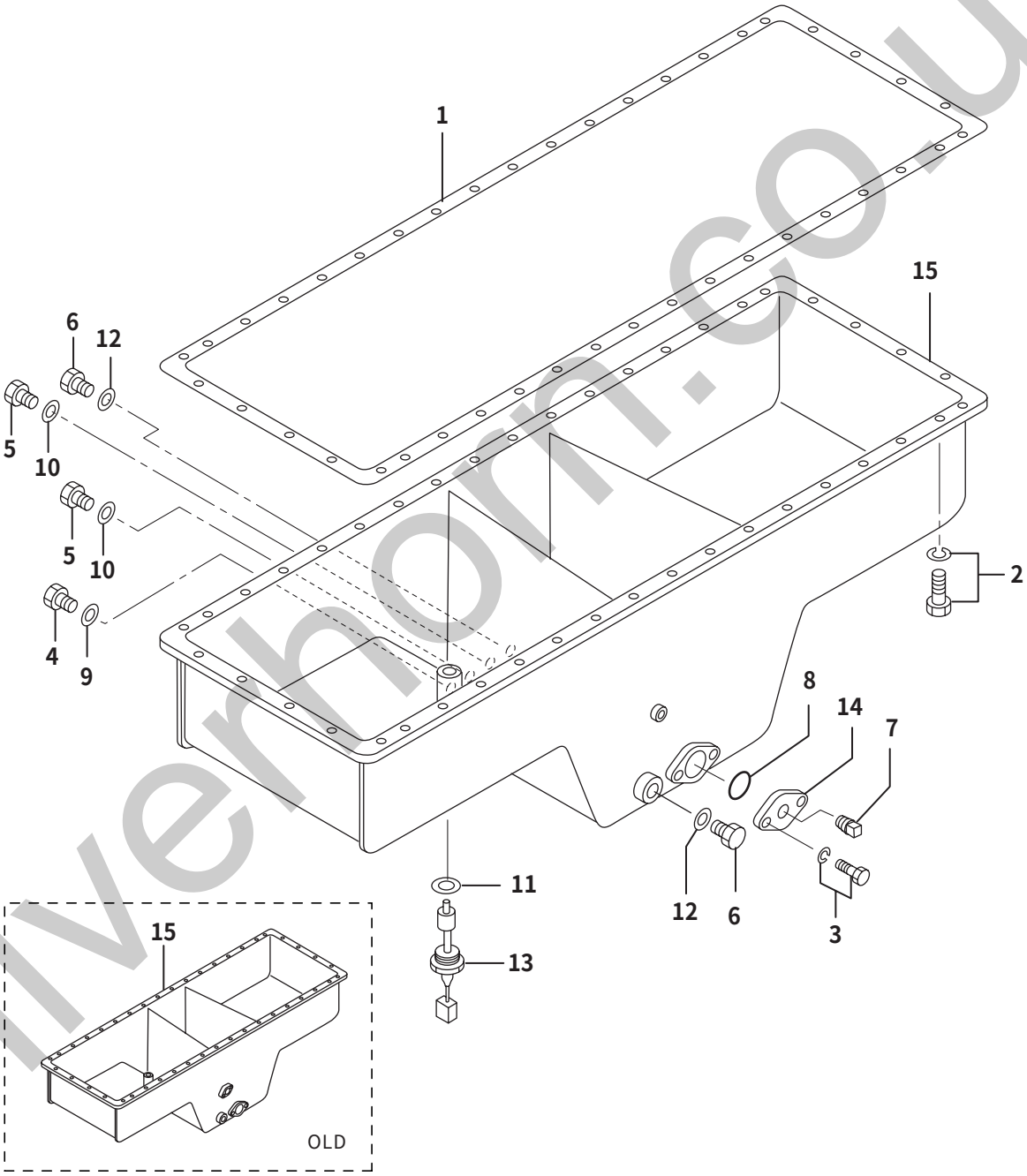

silverhorn.co.uk

13 OIL PAN

REF. -NO.	PART NO.	R/P	SENQG	PART NAME & DESCRIPTION		MODEL & QTY Y1TAA1			APPLICABLE SERIAL NO. FROM@-	-@UPTO	M/R	VRD
1	H3751310200			PACKING,OIL PAN		1						
2	HF180512030			BOLT,W/WASHER	B/W	41					A	
3	HF180512035			BOLT,W/WASHER	B/W	2					A	
4	HF500016000			PLUG,DRAIN		1					A	
5	HF500020000			PLUG,DRAIN		2					A	
6	HF500036000			PLUG,DRAIN		2					A	
7	HF500626000			PLUG,TAPERED		1					A	
8	H0550720600			O-RING		1					A	
9	H0594601601			WASHER,SEALING		1					A	
10	H0594602001			WASHER,SEALING		2					A	
11	H0594603301			WASHER,SEALING		1					A	
12	H0594603601			WASHER,SEALING		2					A	
13	H3789210200			SENSOR,OIL LEVEL		1						
14	H4573551100			FLANGE		1						
15	*		C	PAN,OIL		1						
	H3751330800	1	1C	PAN,OIL		1				-16818		V
	H3751340800	G	2	PAN,OIL		1			16819-			V

silverhorn.co.uk

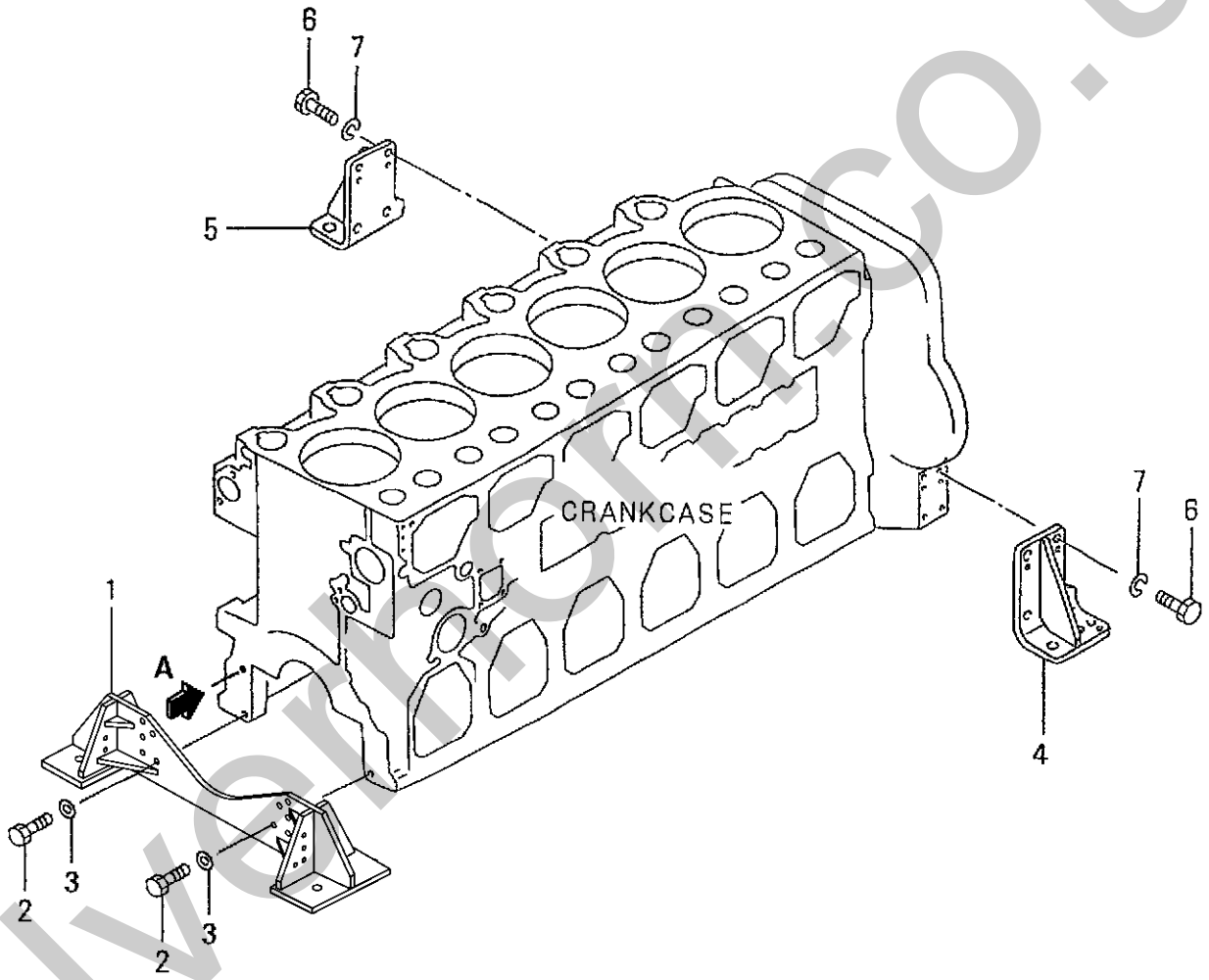

silvermoriff.co.uk

REF. -NO.	PART NO.	R/P	SENQG	PART NAME & DESCRIPTION		MODEL & QTY Y1TAA1			APPLICABLE SERIAL NO. FROM@-	-@UPTO	M/R	VRD
1	H3751403100			BRACKET,MOUNTING	FRONT	2						
2	HF103512075			BOLT		12					A	
3	H3752507900			WASHER		12					A	
4	H3751431100			BRACKET,MOUNTING	RE L.H	1						
5	H3751421200			BRACKET,MOUNTING	RE R.H	1						
6	HF103516040			BOLT		8					A	
7	H3120171800			WASHER		8					A	

silverhorn.co.uk

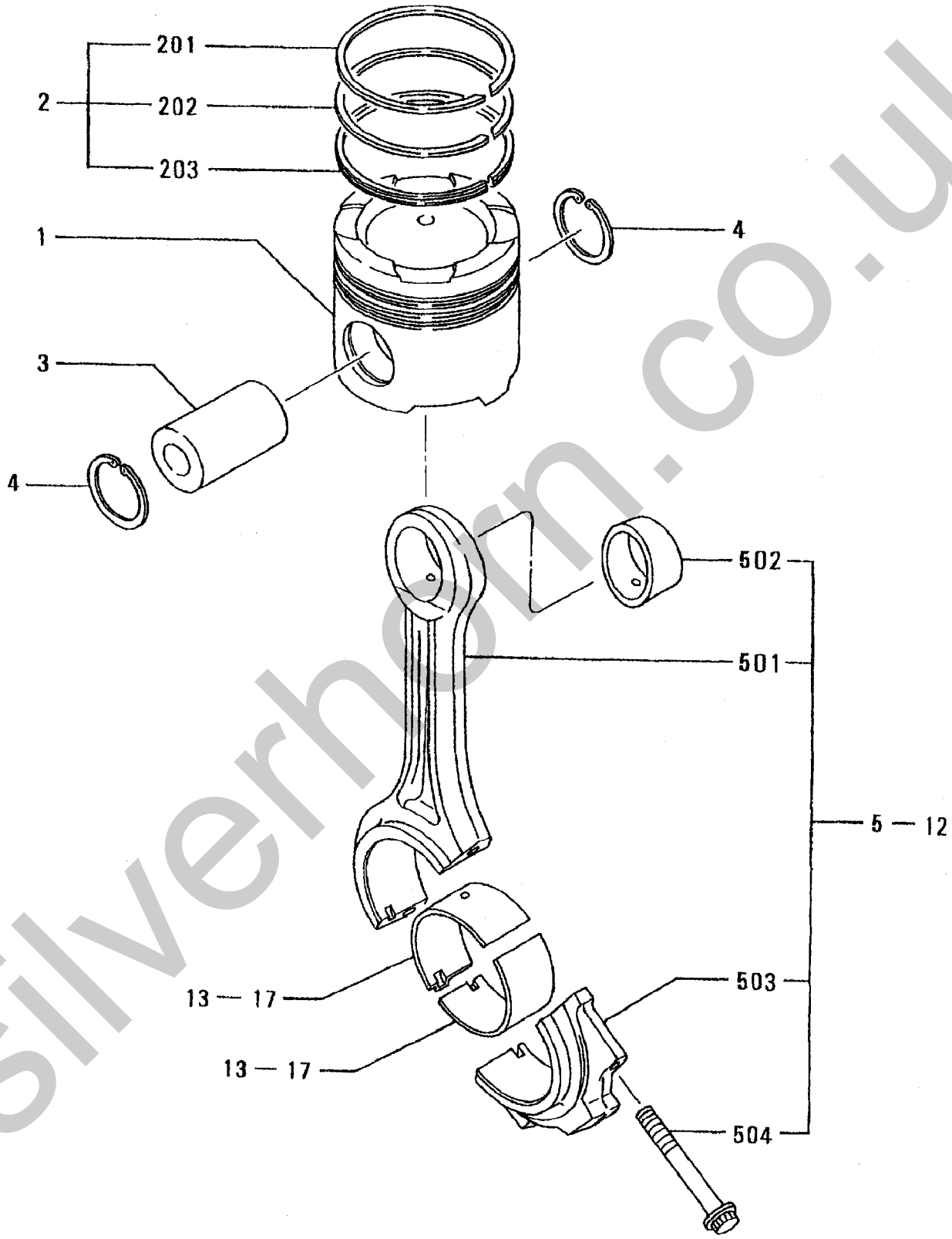

silverhorn.co.uk

17 PISTON & CONNECTING-ROD

REF. -NO.	PART NO.	R/P	SENQG	PART NAME & DESCRIPTION		MODEL & QTY Y1TAA1			APPLICABLE SERIAL NO. FROM@-	-@UPTO	M/R	VRD
1	H3751710400	3		PISTON	STD	6						
2	H3751710010			RING SET,PISTON	STD	6					A	
2 01	*			RING,COMPRESSION		6						
2 02	*			RING,COMPRESSION		6						
2 03	*			RING,OIL		6						
3	H3751718100			PIN,PISTON		6					A	
4	HF320207000			RING,SNAP		12					A	
5	H3751940010		C	CONNECTING-ROD ASSY	STD	6				-16229		
	H3751950010	3	1	CONNECTING-ROD ASSY	STD	6						V
5 01	*			CONNECTING-ROD		6						
5 02	H3751900600		C	BUSHING,CON-ROD		6				-16229		
	H3751910600	3	1	BUSHING,CON-ROD		6						V
5 03	*			CAP,CONNECTING ROD		6						
5 04	H3751920301			BOLT,CON-ROD		12					A	
6	H3751940020		C	CONNECTING-ROD ASSY	RANK A:14.3KG	6				-16229		
	H3751950020	3	1	CONNECTING-ROD ASSY	RANK A:14.3KG	6						V
7	H3751940030		C	CONNECTING-ROD ASSY	RANK B:14.4KG	6				-16229		
	H3751950030	3	1	CONNECTING-ROD ASSY	RANK B:14.4KG	6						V
8	H3751940040		C	CONNECTING-ROD ASSY	RANK C:14.5KG	6				-16229		
	H3751950040	3	1	CONNECTING-ROD ASSY	RANK C:14.5KG	6						V
9	H3751940050		C	CONNECTING-ROD ASSY	RANK D:14.6KG	6				-16229		
	H3751950050	3	1	CONNECTING-ROD ASSY	RANK D:14.6KG	6						V
10	H3751940060		C	CONNECTING-ROD ASSY	RANK E:14.7KG	6				-16229		
	H3751950060	3	1	CONNECTING-ROD ASSY	RANK E:14.7KG	6						V
11	H3751940070		C	CONNECTING-ROD ASSY	RANK F:14.8KG	6				-16229		
	H3751950070	3	1	CONNECTING-ROD ASSY	RANK F:14.8KG	6						V
12	H3751940080		C	CONNECTING-ROD ASSY	RANK G:14.9KG	6				-16229		
	H3751950080	3	1	CONNECTING-ROD ASSY	RANK G:14.9KG	6						V
13	H3751913100			METAL,CON-ROD	STD	12						
14	H3751913200			METAL,CON-ROD	U.S 0.25	12						
15	H3751913300			METAL,CON-ROD	U.S 0.50	12						
16	H3751913400			METAL,CON-ROD	U.S 0.75	12						
17	H3751913500			METAL,CON-ROD	U.S 1.00	12						

silverton1.co.uk

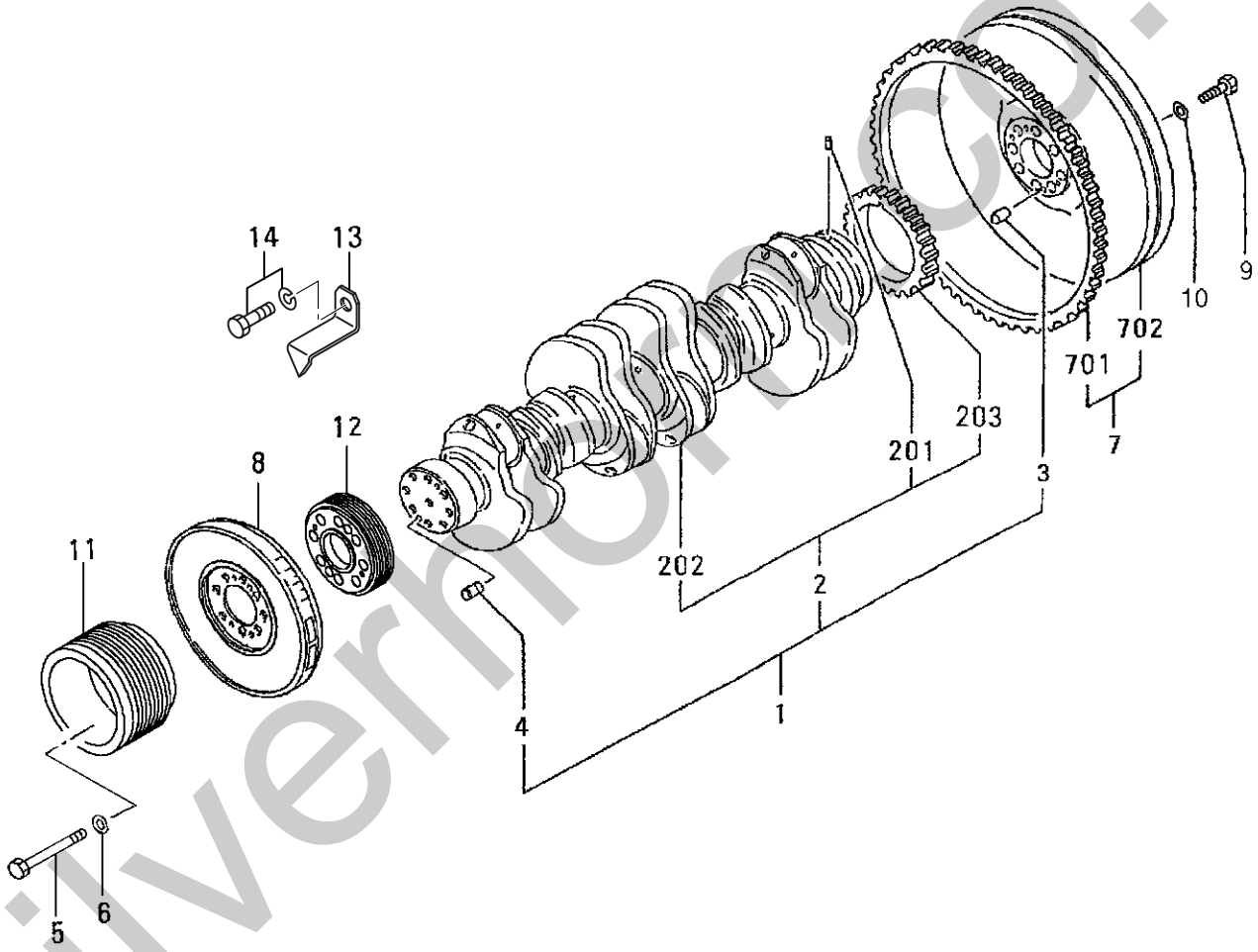

silverhorse.co.uk

REF. -NO.	PART NO.	R/P	SENQG	PART NAME & DESCRIPTION		MODEL & QTY Y1TAA1			APPLICABLE SERIAL NO. FROM@-	-@UPTO	M/R	VRD
1	H3752020010		C	CRANKSHAFT ASSY		1				-17184		
	H3752020011	31		CRANKSHAFT ASSY		1						
2	*			CRANKSHAFT SUB ASSY		1						
2 01	HF284605000			PIN,DOWEL		1					A	
2 02	*			CRANKSHAFT		1						
2 03	H3752300100			GEAR,CRANKSHAFT	Z=60	1						
3	HF284620000			PIN,DOWEL		2					A	
4	H3752000500			PIN,DOWEL		2					A	
5	HF103522150			BOLT		8					A	
6	H3370711701			WASHER		8					A	
7	H3752100010			FLYWHEEL ASSY		1						
7 01	H3252102200			GEAR,RING	Z=182	1						
7 02	*			FLYWHEEL		1						
8	H3752240400		C	DAMPER,VISCOUS		1						
	H3752240401	R1		DAMPER,VISCOUS		1						
9	HF103522080			BOLT		8					A	
10	H3370711701			WASHER		8					A	
11	H3752003100		C	PULLEY,CRANKSHAFT		1						
	H3752003101	R1		PULLEY,CRANKSHAFT		1						V
12	H3752505200		C	PULLEY,CRANKSHAFT		1						
	H3752505201	R1	C	PULLEY,CRANKSHAFT		1						V
	H3752505202	R2		PULLEY,CRANKSHAFT		1						V
13	H3750709400		A	POINTER		1						V
14	HF180510016		A	BOLT,W/WASHER	B/W	1					A	V

silverhorn.co.uk

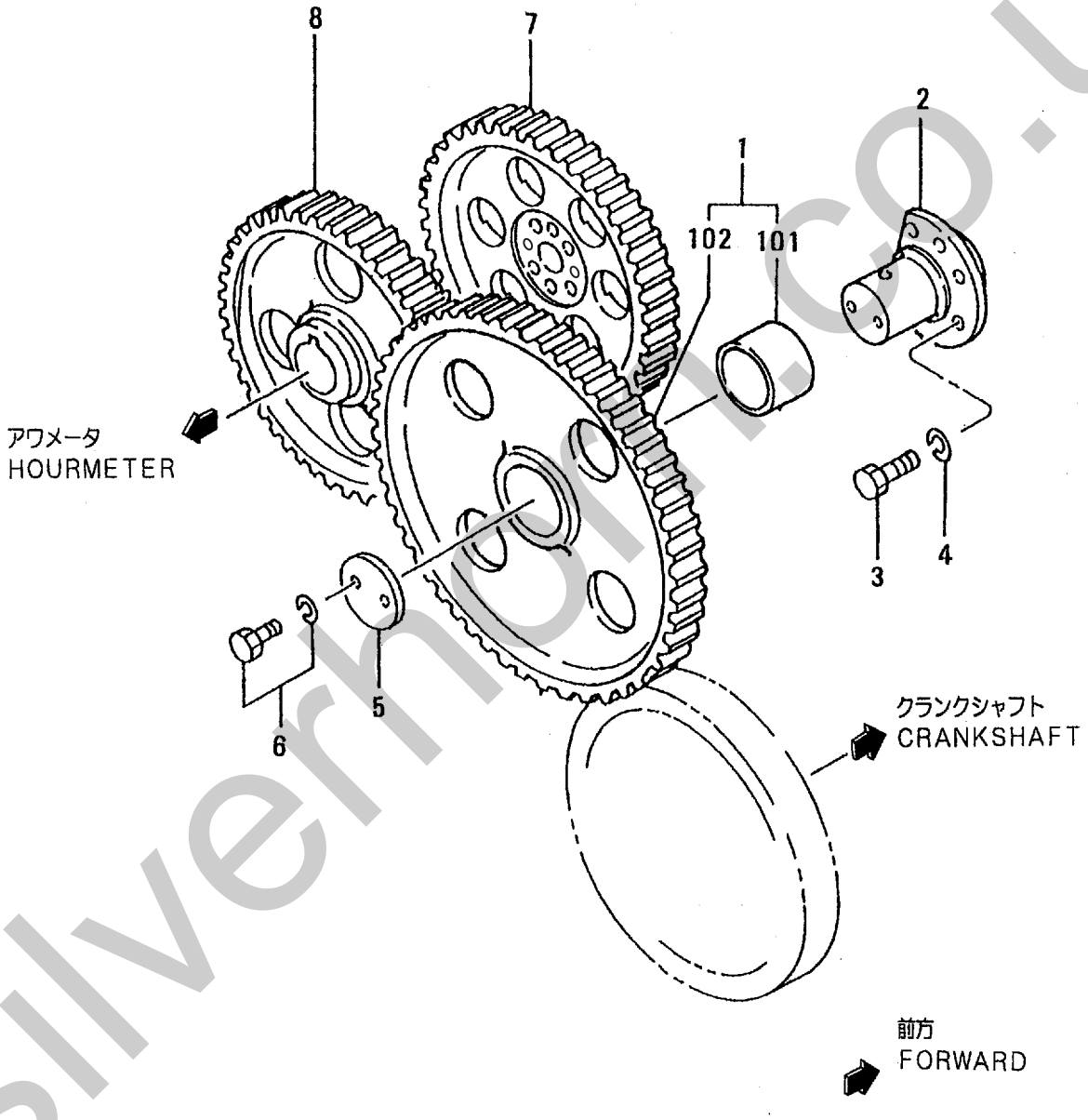

silvermoon.co.uk

23 TIMING GEAR

REF. -NO.	PART NO.	R/P	SENQG	PART NAME & DESCRIPTION		MODEL & QTY Y1TAA1			APPLICABLE SERIAL NO. FROM@-	-@UPTO	M/R	VRD
1	H3752313010			GEAR ASSY,IDLER	Z=80&40	1						
101	H3712303400			BUSHING		1						
102	*			GEAR,IDLER		1						
2	H3752313500		C	SHAFT,IDLER		1				-16728		
	H3752313501	31		SHAFT,IDLER		1						V
3	HF103512030			BOLT		4					A	
4	HF251512000			WASHER,SPRING		4					A	
5	H3242303800			PLATE		1						
6	HF180510020			BOLT,W/WASHER	B/W	2					A	
7	H3752301102		C	GEAR,CAMSHAFT	Z=60	1				-16889		
	H3752311100	N1		GEAR,CAMSHAFT		1			16890-			V
8	H3752312101			GEAR,INJ PUMP	Z=60	1						

silverhorn.co.uk

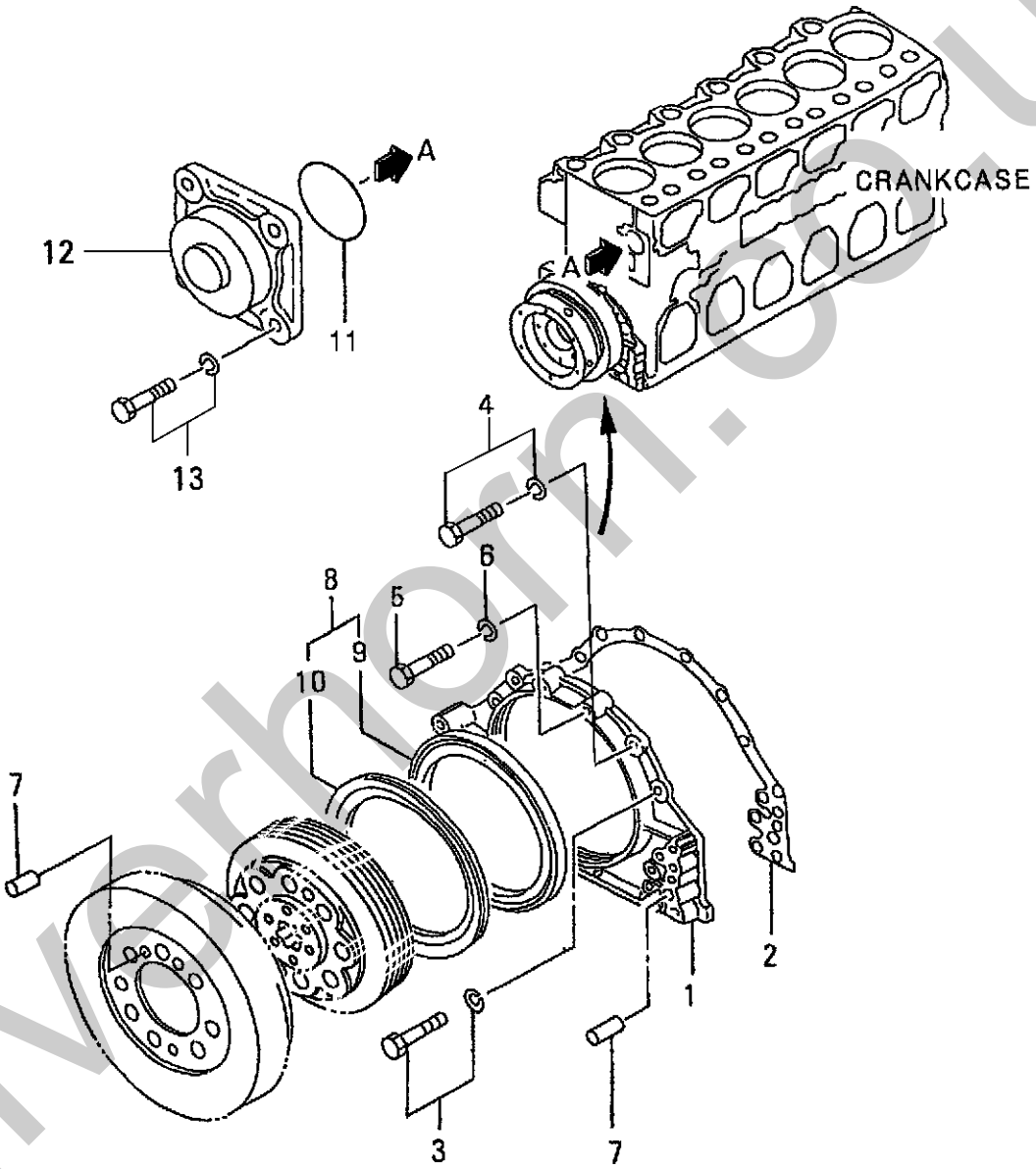

silverhorn.co.uk

25-01 ACCESSORY DRIVE(FRONT)

REF. -NO.	PART NO.	R/P	SENQG	PART NAME & DESCRIPTION		MODEL & QTY Y1TAA1			APPLICABLE SERIAL NO. FROM@-	-@UPTO	M/R	VRD
1	H3752530100		C	COVER,FRONT		1						
	H3752504400	R	1C	COVER,FRONT		1						
	H3752504401	R	2	COVER,FRONT		1						V
2	H3752530200			PACKING		1						
3	HF180512035			BOLT,W/WASHER	B/W	2					A	
4	HF180512040			BOLT,W/WASHER	B/W	2					A	
5	HF103512045			BOLT		2					A	
6	HF251512000			WASHER,SPRING		2					A	
7	HF284614000			PIN,DOWEL		2					A	
8	H3752504001			SEAL ASSY,OIL		1						
9	H3742508201			SLINGER		1						
10	H3751104300			SEAL,OIL		1					A	
11	H0550720900			O-RING		1					A	
12	H3752507500			COVER		1						
13	HF180512035			BOLT,W/WASHER	B/W	4					A	

silverhorn.co.uk

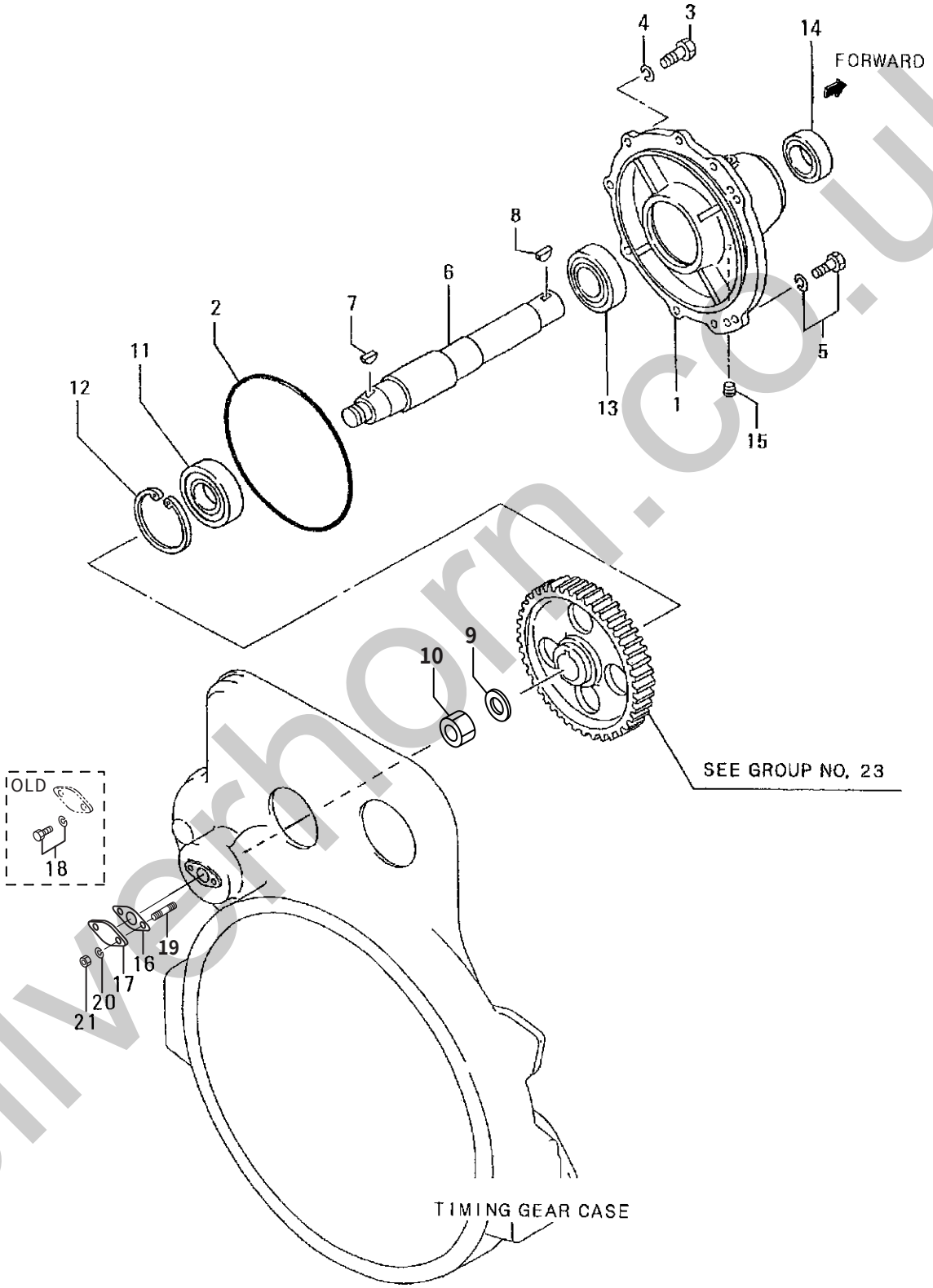

silverhorn.co.uk

25-02 ACCESSORY DRIVE(REAR)

REF. -NO.	PART NO.	R/P	SENQG	PART NAME & DESCRIPTION		MODEL & QTY Y1TAA1			APPLICABLE SERIAL NO. FROM@-	-@UPTO	M/R	VRD
1	H3752543100			CASE,DRIVE		1						
2	H3752503600			O-RING		1					A	
3	HF103512045			BOLT		7					A	
4	HF251512000			WASHER,SPRING		7					A	
5	HF180512035			BOLT,W/WASHER	B/W	1					A	
6	H3752504201			SHAFT,DRIVE		1						
7	HF287007025			KEY,WOODRUFF		1						
8	HF287010032			KEY,WOODRUFF		1						
9	H3752500600			WASHER		1						
10	H9410401100			NUT		1						
11	HF801006309			BEARING,BALL		1					A	
12	HF320210000			RING,SNAP		1					A	
13	HF800606210			BEARING,BALL		1					A	
14	H3752503400			SEAL,OIL		1					A	
15	H0482771300			PLUG,TAPERED		1					A	
16	H3062550501			GASKET,TACHO DRIVE		1					A	
17	H3040705600			COVER		1						
18	HF180508020		D	BOLT,W/WASHER	B/W	2				-16706	A	
19	HF145008025		A	STUD		2			16707-		A	V
20	HF251508000		A	WASHER,SPRING		2			16707-		A	V
21	HF230508000		A	NUT		2			16707-		A	V

silverhorn.co.uk

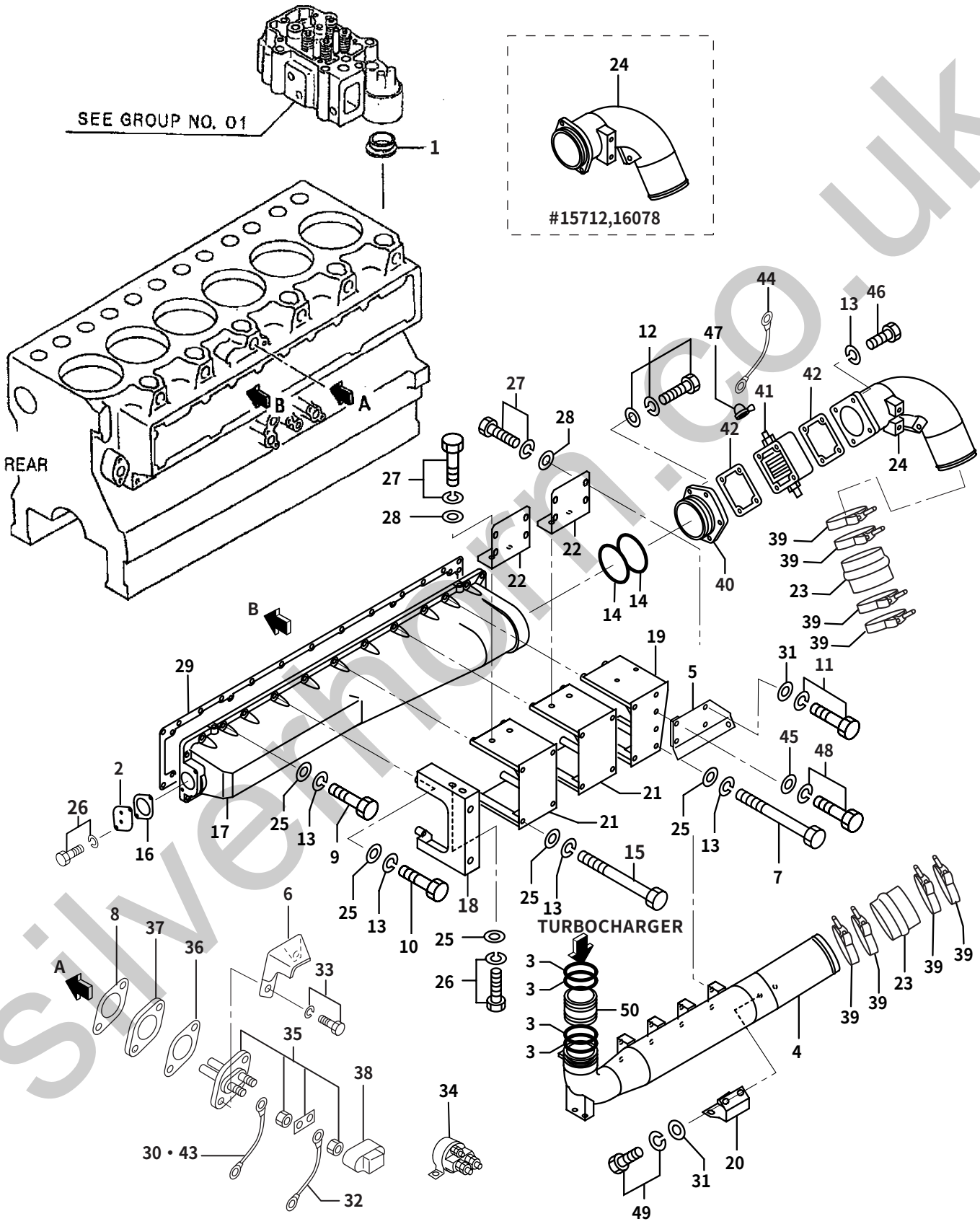

silvermoon.co.uk

REF. -NO.	PART NO.	R/P	SENQG	PART NAME & DESCRIPTION		MODEL & QTY Y1TAA1			APPLICABLE SERIAL NO. FROM@-	-@UPTO	M/R	VRD
1	H3753000200			PACKING		6					A	
2	H3770709300			COVER		1						
3	H35A3000100		Q	O-RING		2				-17160	A	
	H35A3000100		1	O-RING		4			17161-			
4	H3753122100		C	DUCT,AIR		1				-17160	A	
	H3753122103	3	1	DUCT,AIR		1						
5	H3753122500		C	STAY,AIR		1				-16130		
	H3753142501	N	1	STAY,AIR		1			16316-			
6	H3753207800			INSULATOR		1					A	
7	H0597812250			BOLT		4					A	
8	*		C	PACKING		6					A	
	H3753020500	1	1	PACKING		6					A	V
9	HF103512050		Q	BOLT		14				-16130	A	
	HF103512050		1	BOLT		18			16131-		A	
10	HF103512075			BOLT		2					A	
11	HF180512035		C	BOLT,W/WASHER	B/W	3				-16130	A	
	HF180512025	N	1	BOLT,W/WASHER	B/W	3			16131-			
12	HF182510035			BOLT,W/WASHER	B/W	2					A	
13	HF251512000		Q	WASHER,SPRING		26				-16130	A	
	HF251512000		1	WASHER,SPRING		30			16131-		A	
14	HF315311500		C	O-RING		2				-16130	A	
	H0550721150	3	1	O-RING		2						V
15	H0597812240			BOLT		8						
16	H3755510600			GASKET		1					A	
17	H37A5500100			CASE,AIR COOLER		1						
18	H3753102300			STAY,AIR		1						
19	H3753112800			STAY,AIR		1						
20	H3753102900			STAY,AIR		1						
21	H3753102600			STAY,AIR		2						
22	H3753102700			STAY,AIR		2						
23	H3753105401			HOSE,RUBBER		2						
24	H3753112200		C	DUCT,AIR		1				-16130		
	H3753122200	N	1C	DUCT,AIR		1			16361-	-16706		
	H3753122201	3	2	DUCT,AIR		1			16361-			V
25	HF250012000			WASHER,PLAIN		26					A	
26	HF180512030			BOLT,W/WASHER	B/W	4					A	
27	HF180512030		Q	BOLT,W/WASHER	B/W	16				-16130	A	
	HF180512030		1	BOLT,W/WASHER	B/W	14			16131-			
28	HF250012000		Q	WASHER,PLAIN		16				-16130	A	
	HF250012000		1	WASHER,PLAIN		11			16131-			
29	H3755500300			GASKET		1					A	
30	H3753020800			WIRE		5						
31	HF250012000			WASHER,PLAIN		5					A	
32	H3753020700			WIRE		4						
33	HF180512040			BOLT,W/WASHER	B/W	12					A	
34	H0438217400		Q	RELAY		1				-16130		
	H0438217400		1	RELAY		2			16131-			
35	H3753000300			HEATER,AIR		6						
36	*		C	PACKING		6					A	
	H3753020500	1	1	PACKING		6					A	V

silverhorn.co.uk

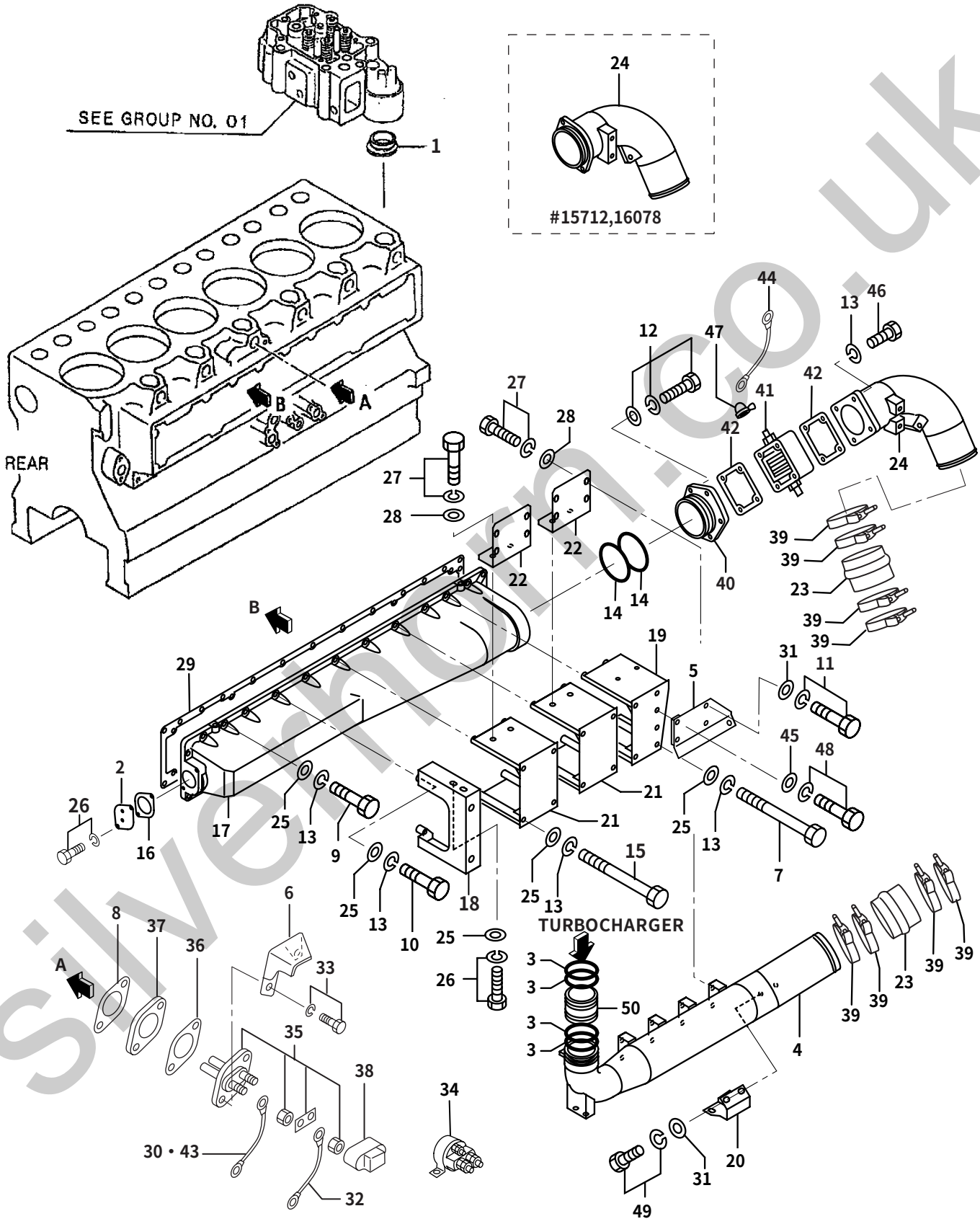

silvermoon.co.uk

REF. -NO.	PART NO.	R/P	SENQG	PART NAME & DESCRIPTION		MODEL & QTY Y1TAA1			APPLICABLE SERIAL NO. FROM@-	-@UPTO	M/R	VRD
37	H3753004900			SPACER		6						
38	H3753010400			CAP,TERMINAL		6						
39	H0483001210		A	CLAMP		8			16361-			
40	H3753113200		A	DUCT		1			16361-			
41	H4263109500		A	HEATER,AIR		1			16361-			
42	H4263109600		A	PACKING		2			16361-			
43	H3753003400		A	WIRE		2			16361-			
44	H3753003500		A	WIRE		1			16361-			
45	H3331101600		A	WASHER		5			16307-			
46	HF103512060		A	BOLT		4			16361-			V
47	H3256109500		A	GROMMET		1			16230-			V
48	HF180512040		A	BOLT,W/WASHER	B/W	2			16131-			V
49	HF180512035		A	BOLT,W/WASHER	B/W	2			16131-		A	V
50	H3753011301		C	CONNECTOR		1				-17160		V
	H35A3006600	N1		CONNECTOR		1			17161-			V

silverhorn.co.uk

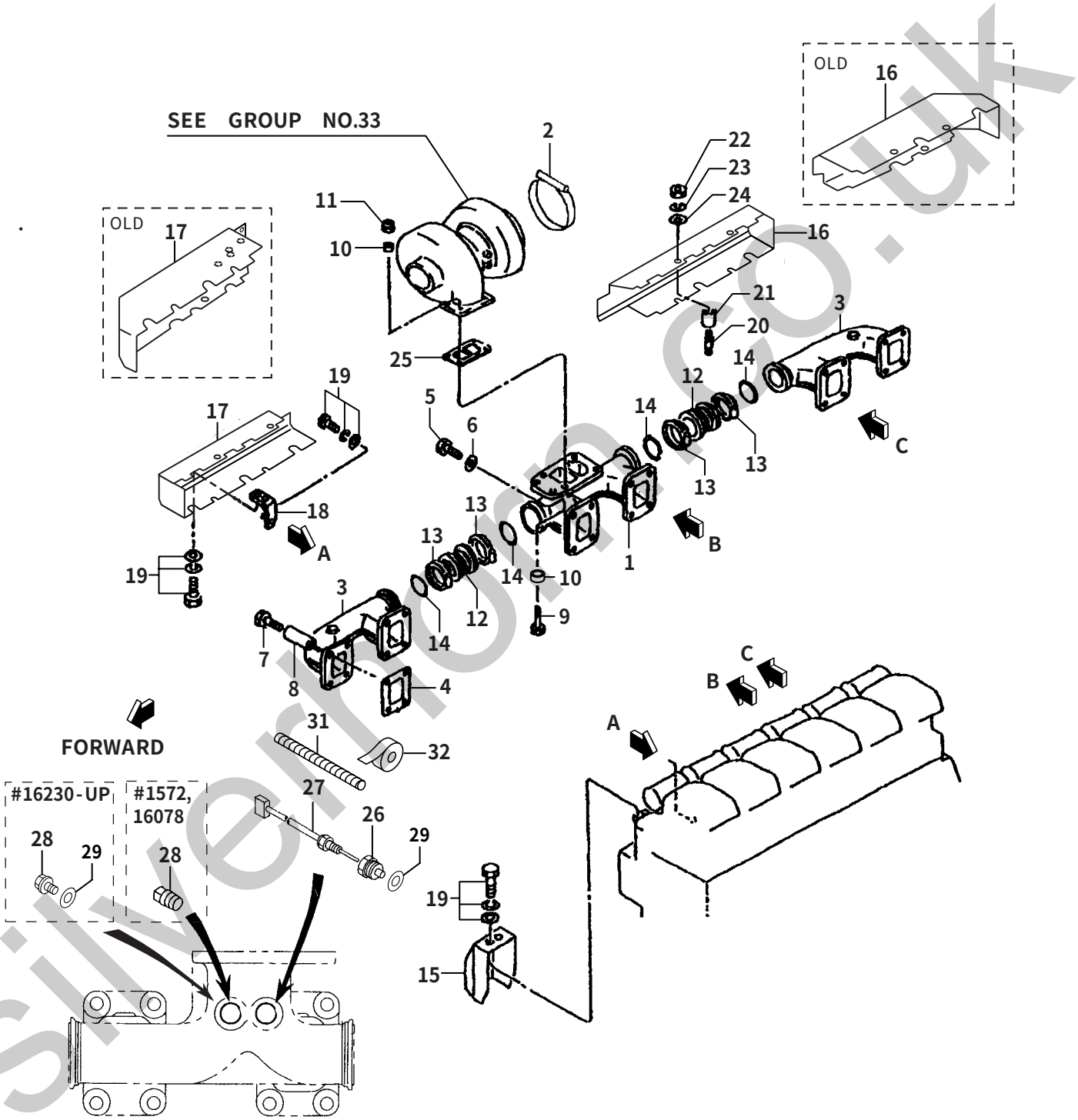

silverton.co.uk

REF. -NO.	PART NO.	R/P	SENQG	PART NAME & DESCRIPTION		MODEL & QTY Y1TAA1			APPLICABLE SERIAL NO. FROM@-	-@UPTO	M/R	VRD
1	H3753202500			MANIFOLD,EXH		1						
2	H4918114003			VCLAMP ASSY		1						
3	H3753240201			MANIFOLD,EXH		2						
4	H3753210500			GASKET,EXHAUST MANIF		6					A	
5	H3253207535			BOLT		1					A	
6	HF250014000			WASHER,PLAIN		1					A	
7	H3753200900			BOLT		23					A	
8	H3743211300			SPACER		23						
9	H0770712055		C	BOLT		4				-16685	A	
	H3253206455	G1		BOLT		4			16686-			
10	H6265201800		C	SPACER		4				-16685		
	H3773303900	N1		SPACER		8			16686-			
11	HF244512000		C	NUT		4				-16685	A	
	H0563401220	N1		NUT		4			16686-			
12	H3753220600			JOINT,FLEXIBLE		2						
13	H4918414000			COUPLING		4						
14	H3253201700			GASKET,JOINT		4					A	
15	H3753227100			INSULATOR		5						
16	H3753243400		C	INSULATOR,FR		1				-16306		
	H3753243401	N1	C	INSULATOR,FR		1			16307-	-16360		
	H3753204400	N2		INSULATOR,FR		1			16361-			V
17	H3753233500		C	INSULATOR,RE		1				-16360		
	H3753204500	N1		INSULATOR,RE		1			16361-			V
18	H3753207600			STAY,INSULATOR		4						
19	HF182508016			BOLT,W/WASHER	B/W	10					A	
20	HF145008035			STUD		4						
21	H3063651900			SPACER		4						
22	HF230008000			NUT,LOCK		4					A	
23	HF251508000			WASHER,SPRING		4					A	
24	HF250008000			WASHER,PLAIN		4					A	
25	H35A3230100			GASKET,TURBOCHARGER		1						
26	H3789201200			CONNECTOR		1						
27	H3789201100			SENSOR,EXHAUST		1						
28	HF500626000		C	PLUG,TAPERED		1				-16229	A	
	H4576475201	N1	C	PLUG,SCREW		1			16230-	-16569		
	H4123204100	G2		PLUG,SCREW		1			16570-			V
29	HF420227000		C	GASKET		2			16230-	-16569		
	H4123203900	N1		GASKET		2			16570-			V
30	H3759003700		A	STAY		1			16307-			V
31	H3789201300		A	TUBE,CORRUGATE		1			15712-			V
32	H3789201400		A	TAPE,VINYL		1			15712-			V

silverhorn.co.uk

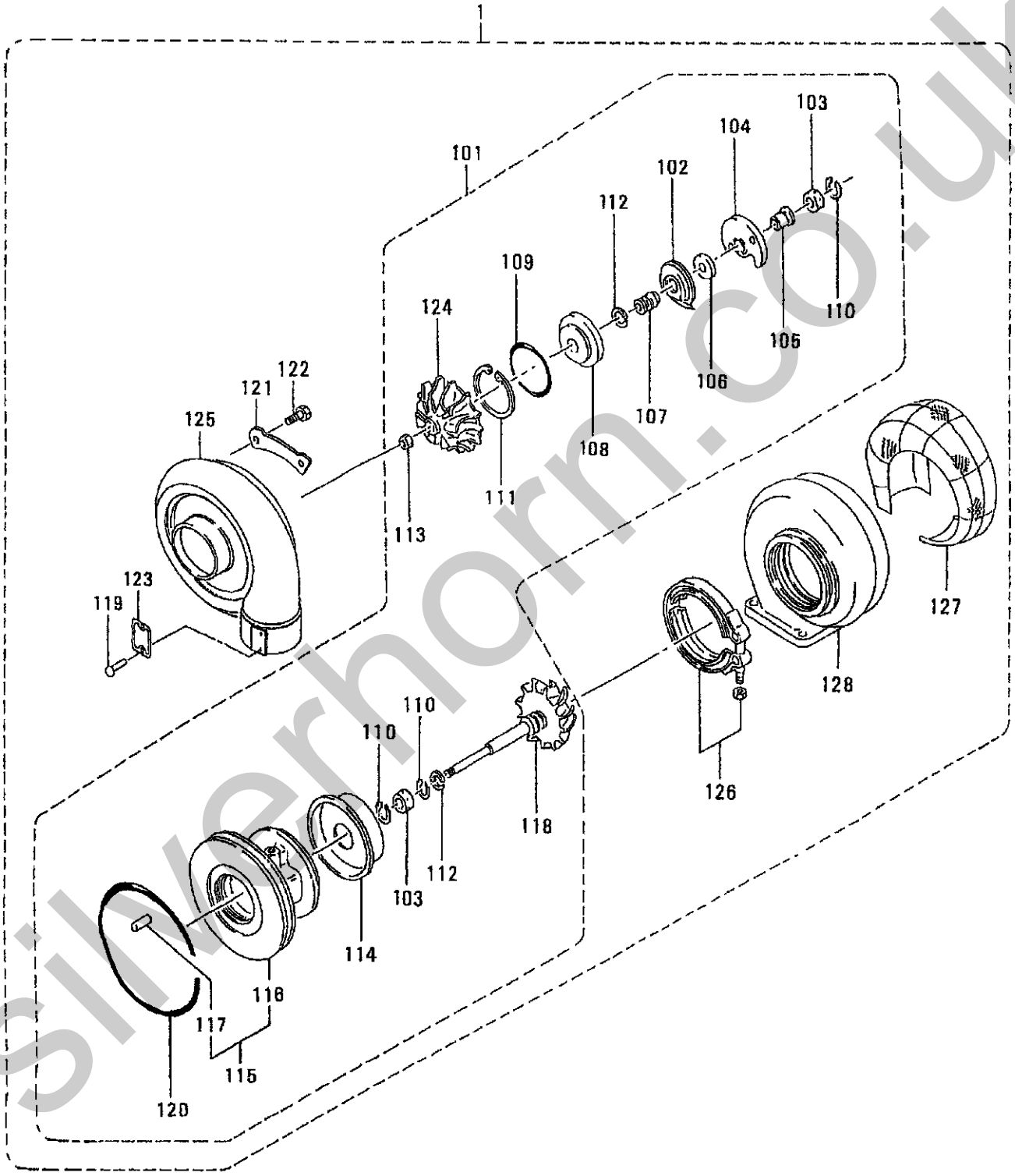

silverhorn.co.uk

33 TURBOCHARGER(MODEL TD13M-48QRC-40)

REF. -NO.	PART NO.	R/P	SENQG	PART NAME & DESCRIPTION	MODEL & QTY Y1TAA1			APPLICABLE SERIAL NO. FROM@-	-@UPTO	M/R	VRD
1	H4918203270			TURBOCHARGER ASSY	1						
101	H4918209040			CARTRIDGE ASSY	1					A	
102	H4918122200			DEFLECTOR,OIL	1						
103	H4918121100			BEARING	2					A	
104	H4918121600			BEARING,THRUST	1					A	
105	H4918142400			RING,THRUST	1						
106	H4918142300			RING,THRUST	1						
107	H4918142100			SLEEVE,FLINGER	1						
108	H4918122500			INSERT	1						
109	H4918122600			O-RING	1					A	
110	H4918122300			RING,SNAP	3					A	
111	H4916223200			RING,SNAP	1					A	
112	H4918123100			RING,PISTON	2					A	
113	H4918142230			NUT,LOCK	1						
114	H4918219300			PLATE,BACK TURBINE	1						
115	H4918225210			HOUSING ASSY,BRG	1						
116	*			HOUSING,BEARING	1						
117	H4918322800			PIN,SPRING	1					A	
118	H4918230230			ROTOR ASSY	1						
119	H0066502048			RIVET,SCREW	2						
120	H4918122700			O-RING	1					A	
121	H4918123500			PLATE,LOCK	4						
122	H4918123700			BOLT	8					A	
123	*			NAME-PLATE	1						
124	H4918245060			WHEEL,COMPRESSOR	1						
125	H4918255240			COVER,COMPRESSOR	1						
126	H4918114004			VCLAMP ASSY	1						
127	H4918214405			LAGGING	1						
128	H4918211550			TURBINEHOUSING	1						

silvermorn.co.uk

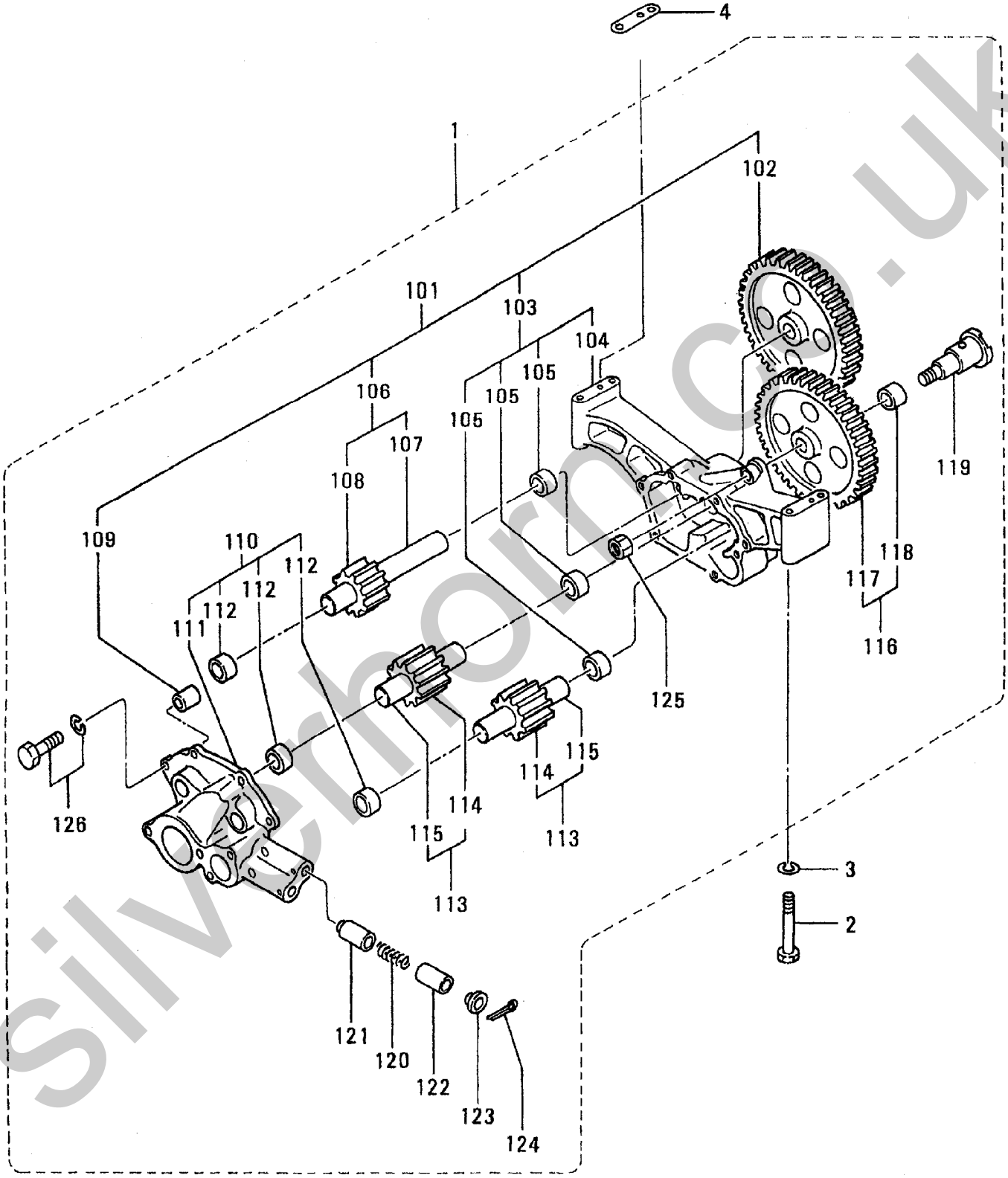

silverhorn.co.uk

35 OIL PUMP

REF. -NO.	PART NO.	R/P	SENQG	PART NAME & DESCRIPTION		MODEL & QTY Y1TAA1			APPLICABLE SERIAL NO. FROM@-	-@UPTO	M/R	VRD
1	H3753550010		C	PUMP ASSY,OIL		1				-16502		
	H3753560010	31		PUMP ASSY,OIL		1						V
101	H3753559010		C	CASE & GEAR ASSY		1				-16502		
	H3753569010	31		CASE & GEAR ASSY		1						V
102	H3753550300			GEAR	Z=32	1						
103	H3753551010			CASE ASSY		1						
104	*			CASE		1						
105	*			BUSHING		3						
106	H3753555010		C	GEAR ASSY	Z=10	1				-16502		
	H3753565010	31		GEAR ASSY		1						V
107	*			SHAFT		1						
108	H3753550500		C	GEAR	Z=10	1				-16502		
	H3753560500	31		GEAR		1						V
109	H3753550900			PIN		2					A	
110	H3753552010			COVER ASSY		1						
111	*			COVER		1						
112	*			BUSHING		3						
113	H3753557010		C	GEAR ASSY	Z=10	2				-16502		
	H3753567010	31		GEAR ASSY		2						V
114	H3753550500		C	GEAR	Z=10	2				-16502		
	H3753560500	31		GEAR		2						V
115	*			SHAFT		2						
116	H3753554010			GEAR ASSY	Z=35	1						
117	*			GEAR		1						
118	*			BUSHING		1						
119	H3753550800			SPINDLE		1						
120	H35A3542100			SPRING		2						
121	H35A3503200			VALVE,SAFETY		2						
122	H35A3503300			STOPPER		2						
123	H35A3503400			SEAT,SPRING		2						
124	HF284140040		C	PIN,SPLIT		2				-16502	A	
	HMF472087	31		PIN,SPLIT		2						V
125	HMH004069			NUT,FLANGE		1					A	
126	HF180510035			BOLT,W/WASHER	B/W	4					A	
2	HF103512100			BOLT		4					A	
3	HF251512000			WASHER,SPRING		4					A	
4	H3753501100			SHIM	AR T=0.10	2					A	

silverhorn.co.uk

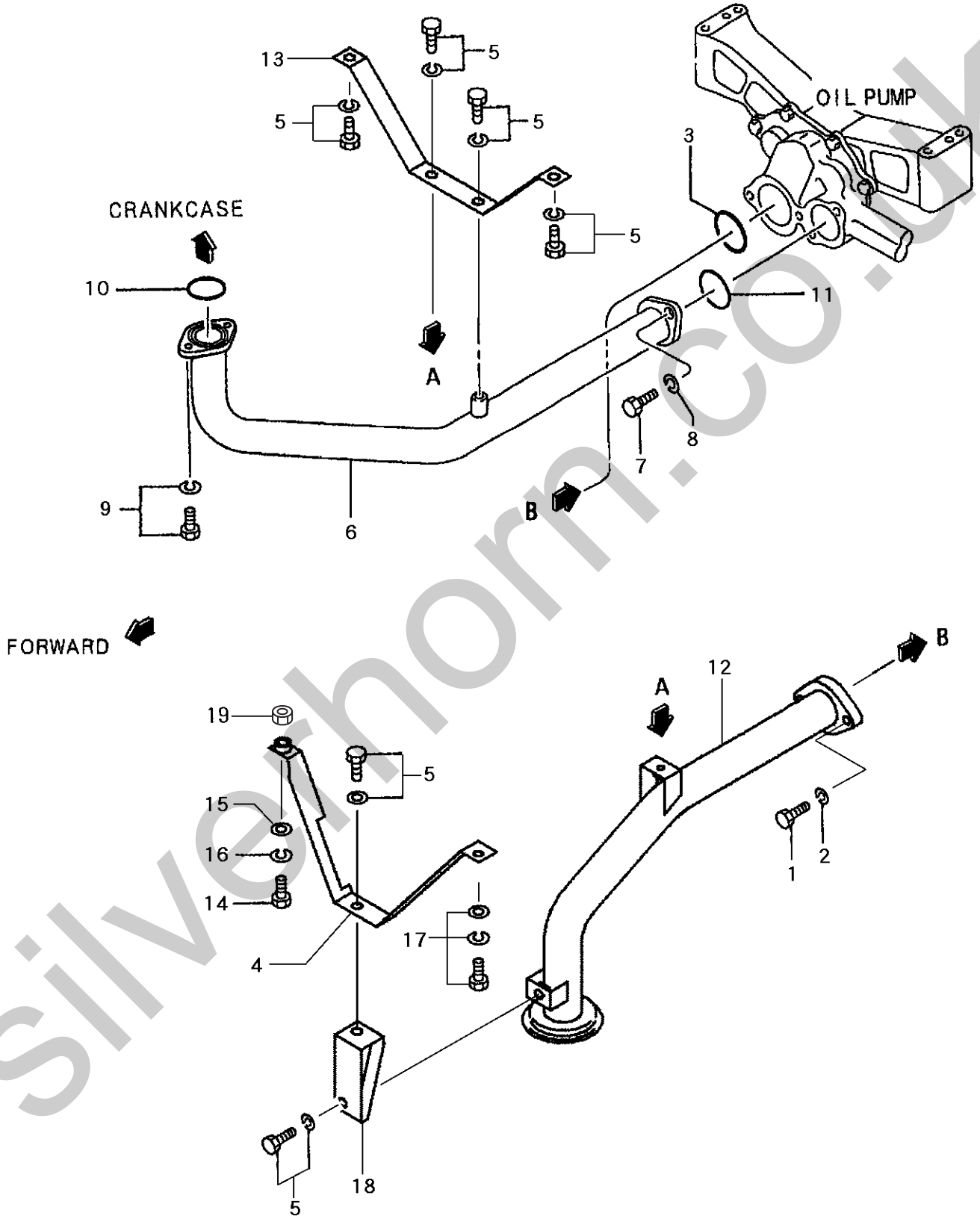

silverhorn.co.uk

36-01 OIL STRAINER

REF. -NO.	PART NO.	R/P	SENQG	PART NAME & DESCRIPTION		MODEL & QTY Y1TAA1			APPLICABLE SERIAL NO. FROM@-	-@UPTO	M/R	VRD
1	HF103510085			BOLT		2					A	
2	HF251510000			WASHER,SPRING		2					A	
3	H0550720650			O-RING		1					A	
4	H3753711200			SUPPORT,OIL		1						
5	HF180512025			BOLT,W/WASHER	B/W	6					A	
6	H3753610200			PIPE,OIL		1						
7	HF103510080			BOLT		2					A	
8	HF251510000			WASHER,SPRING		2					A	
9	HF180512030			BOLT,W/WASHER	B/W	2					A	
10	H0550720450			O-RING		1					A	
11	H0550720500			O-RING		1					A	
12	H3753710800			STRAINER,OIL		1					A	
13	H3753701100			SUPPORT,OIL		1						
14	HF103510030			BOLT		1					A	
15	HF250010000			WASHER,PLAIN		1					A	
16	HF251510000			WASHER,SPRING		1					A	
17	HF182510025			BOLT,W/WASHER	B/W	1					A	
18	H3753701300			STAY,STRAINER		1						
19	HF230010000			NUT		1						V

silverhorn.co.uk

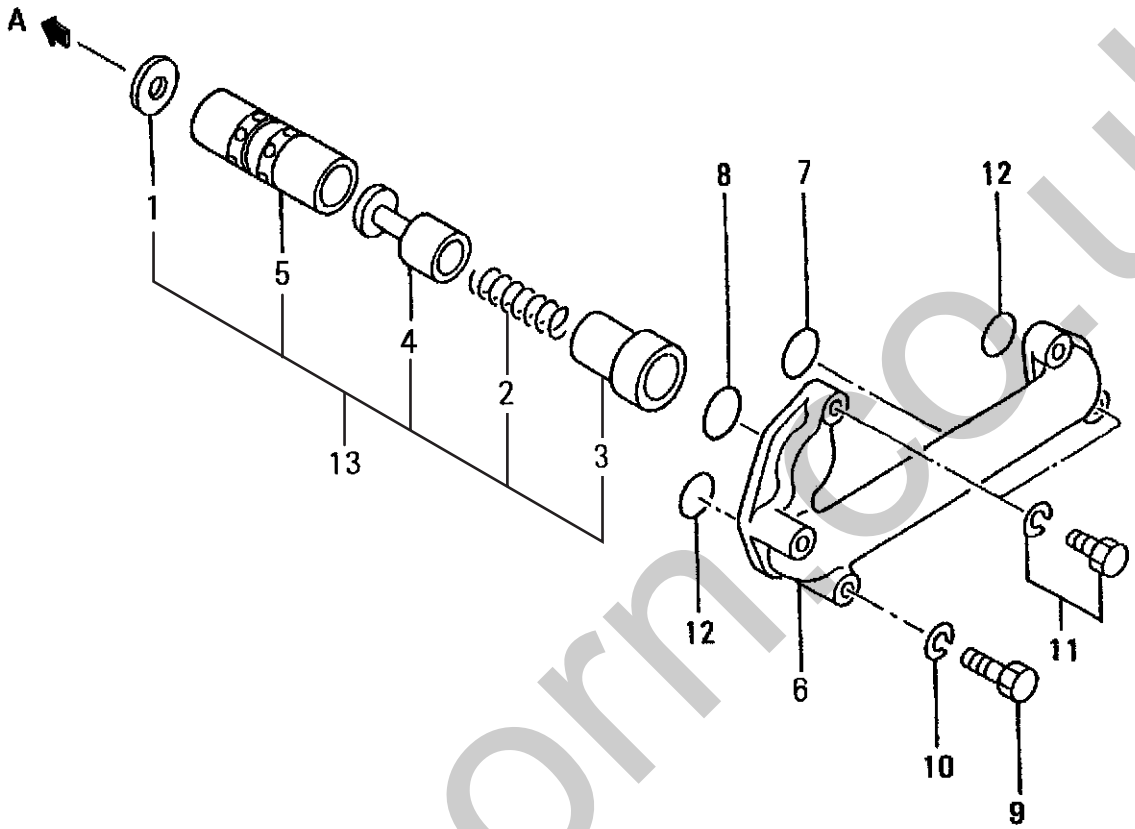

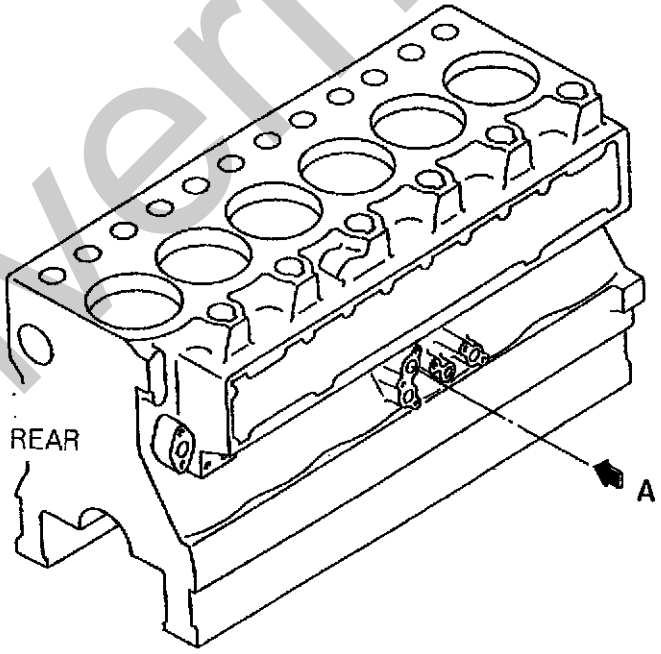

silverhorn.co.uk

36-02 OIL PIPE(PART-1)

REF. -NO.	PART NO.	R/P	SENQG	PART NAME & DESCRIPTION		MODEL & QTY Y1TAA1			APPLICABLE SERIAL NO. FROM@-	-@UPTO	M/R	VRD
1	H3753604800			PLATE		1						
2	H3753614400			SPRING,RELIEF VALVE		1					A	
3	H3753614700			STOPPER,RELIEF VALVE		1						
4	H3753634200			VALVE,RELIEF		1						
5	H3753634500			SLEEVE,RELIEF VALVE		1						
6	H3753624601			PIPE,RELIEF VALVE		1						
7	H0550710180			O-RING		1					A	
8	H0550720450			O-RING		1					A	
9	HF103512070			BOLT		3					A	
10	HF251512000			WASHER,SPRING		3					A	
11	HF180512030			BOLT,W/WASHER	B/W	2					A	
12	H0550720400			O-RING		2					A	
13	H3753634020			RELIEF VALVE ASSY		1						V

silverhorn.co.uk

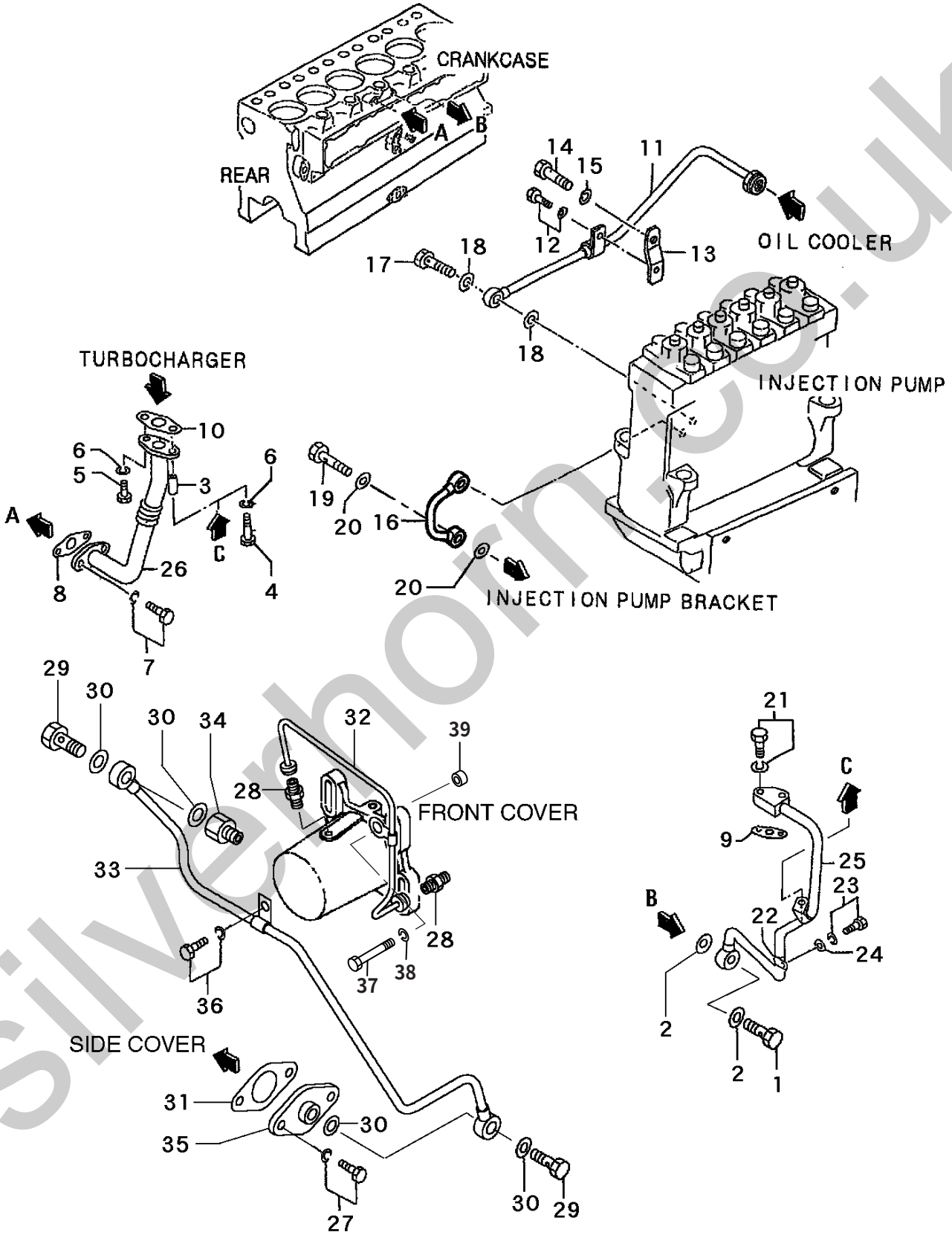

silverhorn.co.uk

36-03 OIL PIPE(PART-2)

REF. -NO.	PART NO.	R/P	SENQG	PART NAME & DESCRIPTION		MODEL & QTY Y1TAA1			APPLICABLE SERIAL NO. FROM@-	-@UPTO	M/R	VRD
1	HF461016000			BOLT,EYE		1					A	
2	H0594601601			WASHER,SEALING		2					A	
3	H5831303100			SPACER		1						
4	HF115510055			BOLT		1					A	
5	HF115510030			BOLT		1					A	
6	HF251510000			WASHER,SPRING		2					A	
7	HF180512025			BOLT,W/WASHER	B/W	2					A	
8	H3753612700			PACKING		1					A	
9	H3623610700			PACKING		1					A	
10	H3623610800			PACKING		1					A	
11	H3753653100		C	PIPE,OIL		1				-16360		
	H3753653101	31		PIPE,OIL		1						
12	HF180510020			BOLT,W/WASHER	B/W	1					A	
13	H3756109800			STAY,OIL PIPE		1						
14	HF103514025			BOLT		1					A	
15	HF251514000			WASHER,SPRING		1					A	
16	H3753643300			PIPE,OIL DRAIN		1						
17	HF461012000			BOLT,EYE		1					A	
18	H0594601201			WASHER,SEALING		2					A	
19	HF461014000			BOLT,EYE		1					A	
20	H0594601401			WASHER,SEALING		2					A	
21	HF200510040			BOLT,W/WASHER	B/W	2					A	
22	H3233609500			CLAMP		1					A	
23	HF180512020			BOLT,W/WASHER	B/W	1					A	
24	HF250012000			WASHER,PLAIN		1					A	
25	H3753612100			PIPE,OIL		1						
26	H3753632200			PIPE,OIL DRAIN		1						
27	HF180510025			BOLT,W/WASHER	B/W	2					A	
28	HF454006300			CONNECTOR		2					A	
29	HF461014000			BOLT,EYE		2					A	
30	H0594601401			WASHER,SEALING		4					A	
31	H3344210200		C	PACKING		1				-16360	A	
	H3344220200	31		PACKING		1						
32	H3753702100			PIPE,OIL		1						
33	H3753702200			PIPE,OIL DRAIN		1						
34	H3753702300			CONNECTOR		1						
35	H3753702400			COVER		1						
36	HF180510020			BOLT,W/WASHER	B/W	1						
37	HF103512120			BOLT		1					A	
38	HF251512000			WASHER,SPRING		1					A	
39	H3773303800			SPACER		1						

silverhorn.co.uk

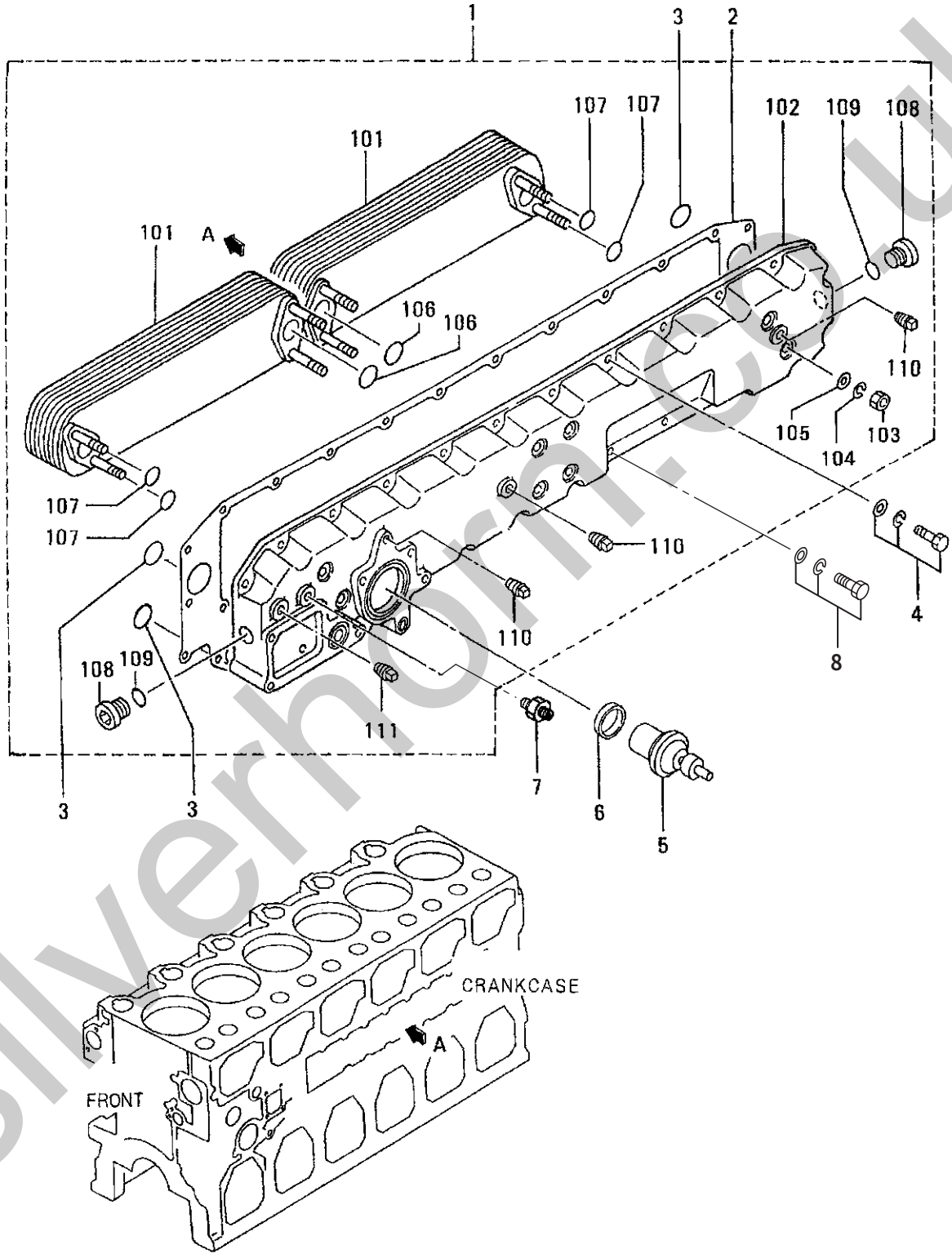

silverhorn.co.uk

REF. -NO.	PART NO.	R/P	SENQG	PART NAME & DESCRIPTION		MODEL & QTY Y1TAA1			APPLICABLE SERIAL NO. FROM@-	-@UPTO	M/R	VRD
1	H3753901010		C	COOLER ASSY,OIL		1				-16706		
	H3753911010	G	1	COOLER ASSY,OIL		1			16707-			V
101	H3753910100			ELEMENT,OIL		2						
102	H3753901300		C	COVER,OIL COOLER		1				-16706		
	H3753911300	3	1	COVER,OIL COOLER		1						V
103	HF230010000			NUT		8					A	
104	HF251510000			WASHER,SPRING		8					A	
105	HF250010000			WASHER,PLAIN		8					A	
106	HMH035626			O-RING		4					A	
107	HMH035092			O-RING		8					A	
108	HME064526			PLUG		2					A	
109	HMH035093			O-RING		2					A	
110	HF500613000			PLUG,TAPERED		3						
111	HF500610000			PLUG,TAPERED		1						
2	H3753910200			PACKING,OIL COOLER		1						
3	H3753900400			O-RING		3					A	
4	HF182512035		Q	BOLT,W/WASHER	B/W	21				-16706	A	
	HF182512035		1	BOLT,W/WASHER	B/W	19			16707-			
5	H3753910500			THERMOSTAT,OIL		1						
6	H3753900600			SEAL,THERMOSTAT		1						
7	HF454008000			CONNECTOR		1						
8	HF182512030		A	BOLT,W/WASHER	B/W	2			16707-			V

silverhorn.co.uk

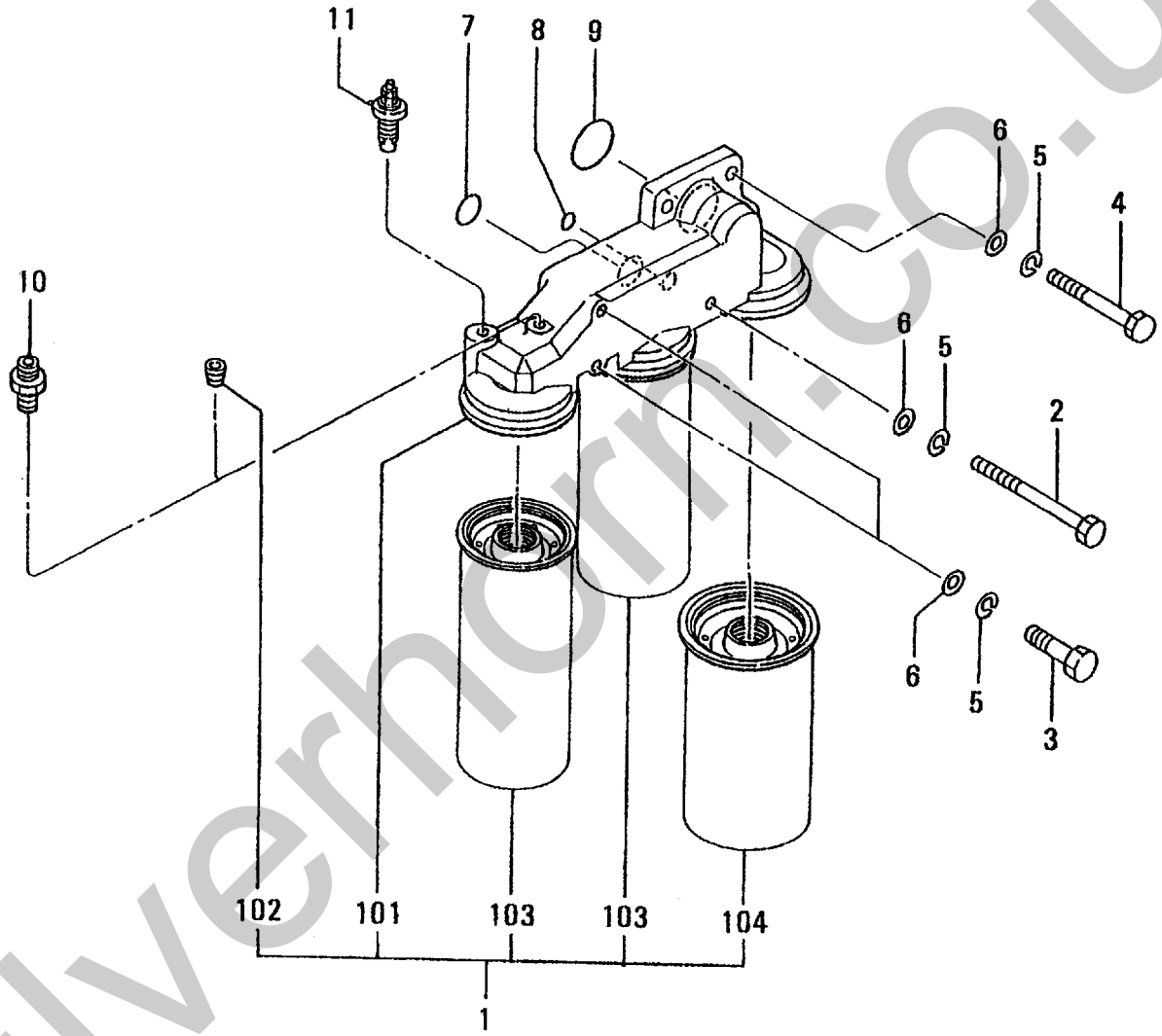

silverhorn.co.uk

REF. -NO.	PART NO.	R/P	SENQG	PART NAME & DESCRIPTION	MODEL & QTY Y1TAA1			APPLICABLE SERIAL NO. FROM@-	-@UPTO	M/R	VRD
1	H3754001010			FILTER ASSY,OIL	1					A	
101	H3754010100			BRACKET ASSY	1						
102	*			PLUG,TAPERED	1						
103	H3774046100			ELEMENT,CARTRIDGE	2					A	
104	H3754002100			ELEMENT,CARTRIDGE	1					A	
2	HF103512110			BOLT	1					A	
3	HF103512045			BOLT	2					A	
4	H3006822400			BOLT	3					A	
5	HF251512000			WASHER,SPRING	6					A	
6	HF250012000			WASHER,PLAIN	6					A	
7	H0550720400			O-RING	1					A	
8	H0550710180			O-RING	1					A	
9	H0550720750			O-RING	1					A	
10	HF454006300			CONNECTOR	1						
11	H3754001300			ALARM,OIL FILTER	1						

silverhorn.co.uk

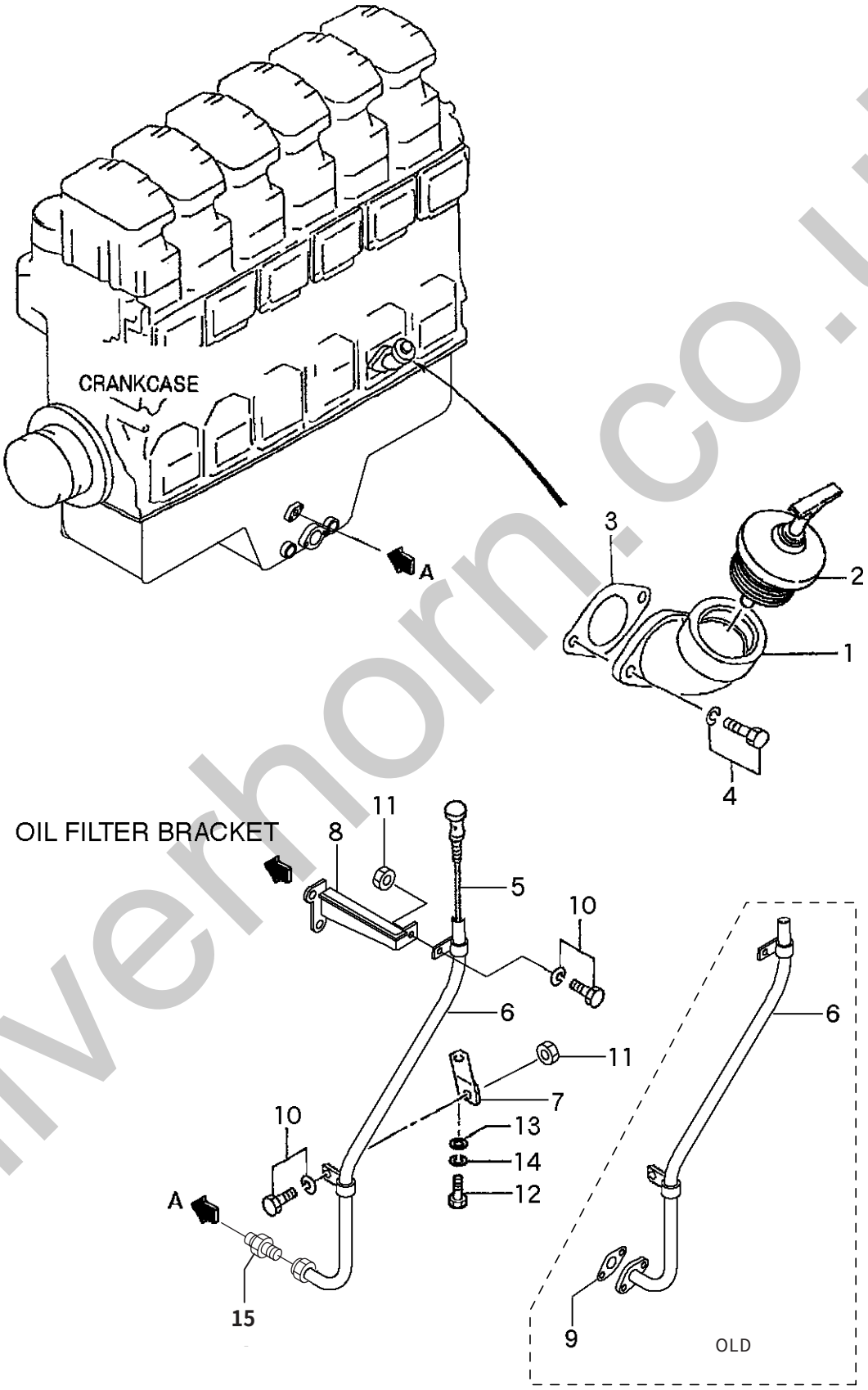

silverhorn.co.uk

42 OIL FILLER & LEVEL GAGE

REF. -NO.	PART NO.	R/P	SENQG	PART NAME & DESCRIPTION		MODEL & QTY Y1TAA1			APPLICABLE SERIAL NO. FROM@-	-@UPTO	M/R	VRD
1	H3254220500			FILLER,OIL		1						
2	H34A4200500			CAP,OIL		1						
3	H3344220200			PACKING		1					A	
4	HF180510025			BOLT,W/WASHER	B/W	2					A	
5	H3754204300			GAGE,OIL LEVEL		1						
6	H3754204400		C	GUIDE,OIL LEVEL		1				-16818		
	H3754214400	N1		GUIDE,OIL LEVEL		1			16819-			V
7	H3754204800			STAY,OIL		1						
8	H3754224700			STAY,OIL		1						
9	H3621315800		C	GASKET		1				-16781		
	H3303620600	3	D	PACKING		1				-16818		V
10	HF180512020			BOLT,W/WASHER	B/W	2						
11	HF230012000			NUT		2						
12	HF103512045			BOLT		1						
13	H8242001900			WASHER		1						
14	HF251512000			WASHER,SPRING		1						
15	HF454012000		A	CONNECTOR		1			16819-			V

silverhorn.co.uk

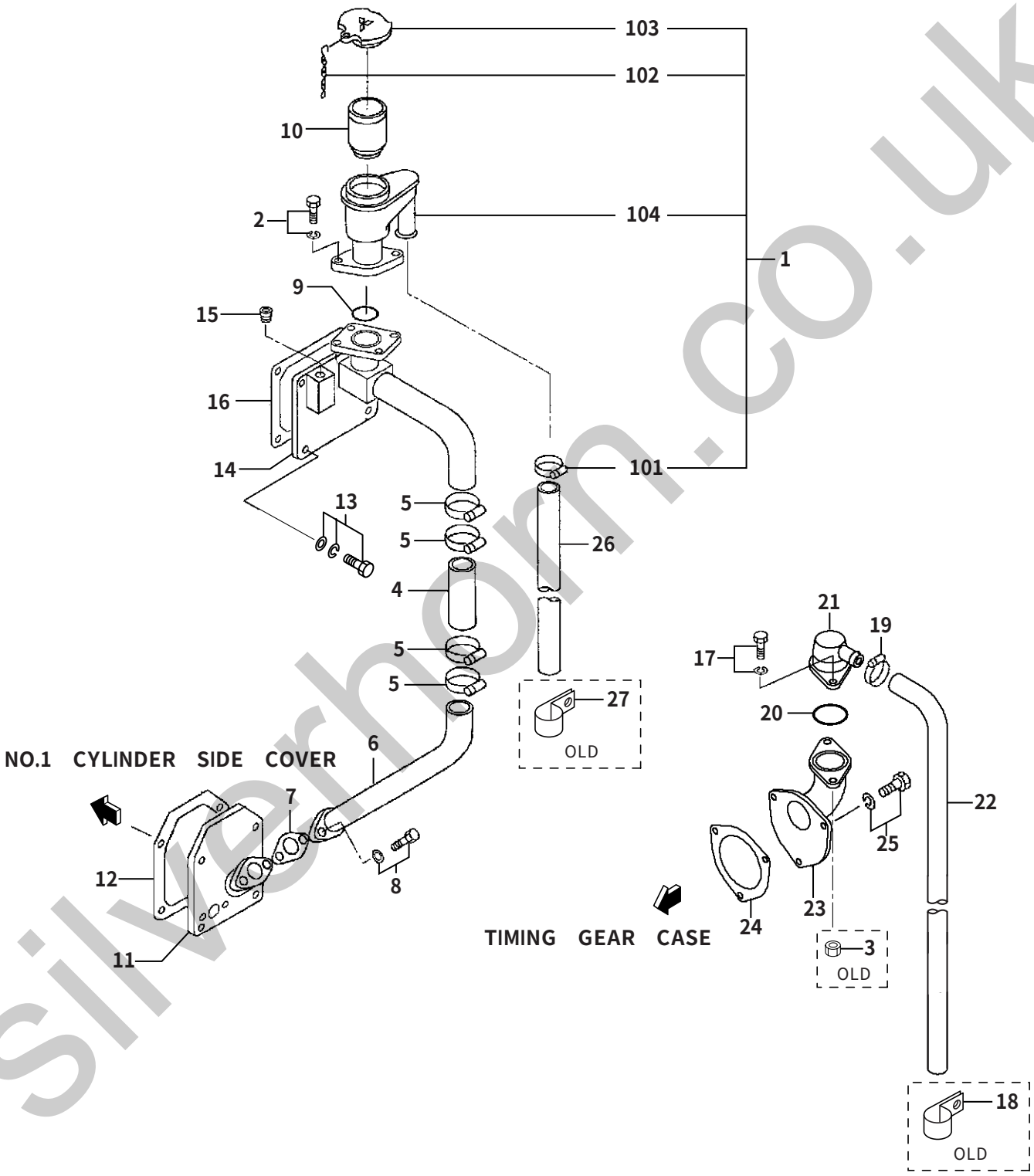

silverhorn.co.uk

43 BREATHER

REF. -NO.	PART NO.	R/P	SENQG	PART NAME & DESCRIPTION		MODEL & QTY Y1TAA1			APPLICABLE SERIAL NO. FROM@-	-@UPTO	M/R	VRD
1	H3754300060			BREATHER ASSY		1					A	
101	H0531750400			CLAMP,HOSE		1					A	
102	H3004208201			CHAIN		1						
103	H3254201100			CAP		1						
104	*			BREATHER,LOW		1						
2	HF180510030			BOLT,W/WASHER	B/W	2					A	
3	HF230010000		D	NUT		2				-16593	A	
4	*		C	HOSE,RUBBER		1					A	
	H3754303300	11		HOSE,RUBBER		1						V
5	H0531750701			CLAMP,HOSE		4					A	
6	H3754308600			PIPE,BREATHER		1						
7	H3254636800		C	GASKET		1				-16863	A	
	H35B3602900	31		GASKET		1						V
8	HF180512035			BOLT,W/WASHER	B/W	2					A	
9	H0550720600			O-RING		1					A	
10	H3254211300			ELEMENT,BREATHER		1						
11	H3750708700			COVER,SIDE		1						
12	H3770717200			PACKING,SIDE COVER		1					A	
13	HF182512030			BOLT,W/WASHER	B/W	4					A	
14	H3750718900			COVER,CAM		1						
15	HF500526001			PLUG,TAPERED		1					A	
16	H4750033100			PACKING		1					A	
17	HF180510025			BOLT,W/WASHER	B/W	2					A	
18	H0531743000		Q	CLIP		2				-16306		
	H0531743000		1D	CLIP		1			16307-	-16593		
19	H0531750401		C	CLAMP		1				-16396		
	H0531702300	31		CLAMP		1			16397-			
20	H0550720550			O-RING		1					A	
21	H3624300010			BREATHER ASSY		1						
22	H3624301300		Q	PIPE,BREATHER		2				-16306		
	H3624301300		1	PIPE,BREATHER		1			16307-			
23	H3754300600		C	BRACKET,BREATHER		1				-16593		
	H3754300601	N1		BRACKET,BREATHER		1			16594-			V
24	H3751113200			PACKING		1					A	
25	HF180510020			BOLT,W/WASHER	B/W	3					A	
26	H3624301400		A	PIPE,BREATHER		1			16397-			
27	H4247410400		D	CLIP		1			16397-	-16593		

silverhorn.co.uk

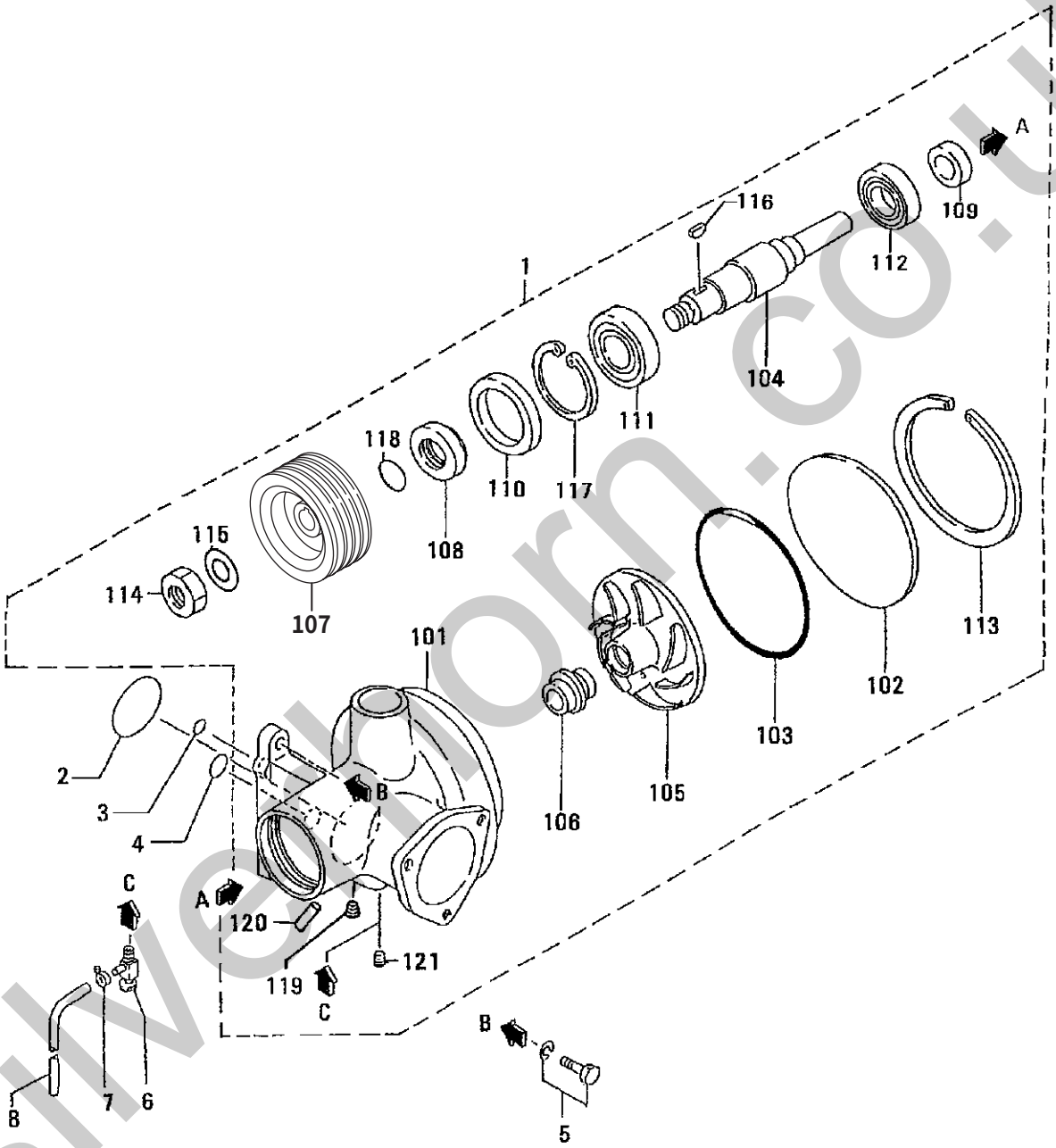

silverthorn.co.uk

45 WATER PUMP

REF. -NO.	PART NO.	R/P	SENQG	PART NAME & DESCRIPTION		MODEL & QTY Y1TAA1			APPLICABLE SERIAL NO. FROM@-	-@UPTO	M/R	VRD
1	H3754500030		C	PUMP ASSY,WATER		1				-16781		
	H3754510030	31		PUMP ASSY,WATER		1						V
101	H3754540101			CASE,WATER PUMP		1						
102	H3754500200			COVER,WATER PUMP		1						
103	HF315317000			O-RING		1					A	
104	H3754530400			SHAFT,WATER PUMP		1						
105	H3754500500			IMPELLER		1					A	
106	H3754510600		C	SEAL,UNIT		1				-16781		
	H3754520600	31		SEAL,UNIT		1						V
107	H3754504100			PULLEY,WATER PUMP		1						
108	H3754520800			SPACER		1						
109	H3754501300			SEAL,OIL		1					A	
110	H3754501400			SEAL,OIL		1					A	
111	HF801206308			BEARING,BALL		1					A	
112	HF800806208			BEARING,BALL		1					A	
113	H3754500300			RING,SNAP		1					A	
114	HF232024000			NUT,JAM		1						
115	H3754501500			WASHER		1					A	
116	H3754501600			KEY,WOODRUFF		1						
117	HF320209000			RING,SNAP		1					A	
118	HF315604000			O-RING		1					A	
119	H34A3500900			PLUG		1					A	
120	H3044500800			PIPE		1						
121	H3754500900			PLUG		1						
2	HF315309500			O-RING		1					A	
3	H0550710150			O-RING		1					A	
4	H0550720250			O-RING		1					A	
5	HF180512030			BOLT,W/WASHER	B/W	5					A	
6	H3254512900		C	COCK,WATER DRAIN		1				-16618		
	H3254512901	31		COCK,WATER DRAIN		1						V
7	HF430000800			CLAMP,HOSE		1						
8	HF400205100			TUBE,SOFT VINYL		1					A	

silverhorn.co.uk

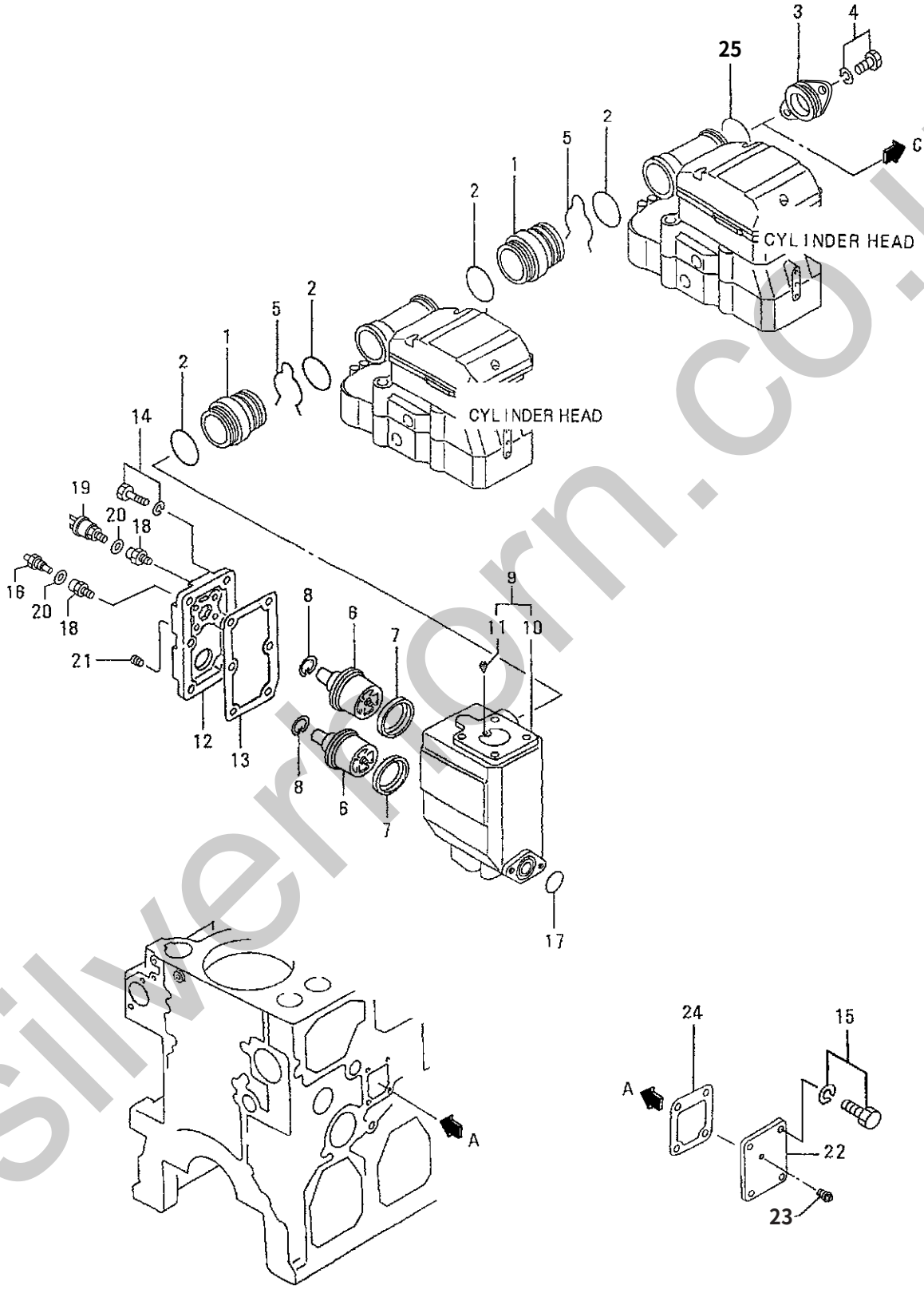

silverthorn.co.uk

46-01 THERMOSTAT & WATER HEATER

REF. -NO.	PART NO.	R/P	SENQG	PART NAME & DESCRIPTION		MODEL & QTY Y1TAA1			APPLICABLE SERIAL NO. FROM@-	-@UPTO	M/R	VRD
1	H3754621100			CONNECTOR		6						
2	H3754600500		Q	O-RING		13				-17211		
	H3754600500		1	O-RING		12			17212-			
3	H3754611200		C	COVER		1				-17211		
	H3754621200	G	1	COVER		1			17212-			V
4	HF180510025		Q	BOLT,W/WASHER	B/W	1				-17211	A	
	HF180510025		1	BOLT,W/WASHER	B/W	2			17212-			
5	H3754611300			RING,SNAP		6					A	
6	H3754621700			THERMOSTAT	71°C	2						
7	H3754601800			SEAL,THERMOSTAT		2						
8	H3754600900			RING,SNAP		2					A	
9	H3754600010			CASE ASSY,THERMOSTAT		1						
10	*			CASE,THERMOSTAT		1						
11	H3664600090			VALVE ASSY,JIGGLE		1						
12	H3754623201			COVER,THERMOSTAT		1						
13	H3754613300		C	PACKING,COVER		1				-16863		
	H3754623300	3	1	PACKING,COVER		1						V
14	HF180510030			BOLT,W/WASHER	B/W	6					A	
15	HF180512030			BOLT,W/WASHER	B/W	4					A	
16	H3759200200			SENSOR,THERMO		1						
17	HF315306000			O-RING		1					A	
18	H4560042901			CONNECTOR		2						
19	H3754704100			SWITCH,THERMO		1					A	
20	H0594601601			WASHER,SEALING		2					A	
21	HF500521001			PLUG,TAPERED		2					A	
22	H4750060400			COVER		1						
23	HF500610000			PLUG,TAPERED		1					A	
24	H3754619800			PACKING,W/HEATER		1						
25	H0550557060		A	O-RING		1			17212-			V

silverhorn.co.uk

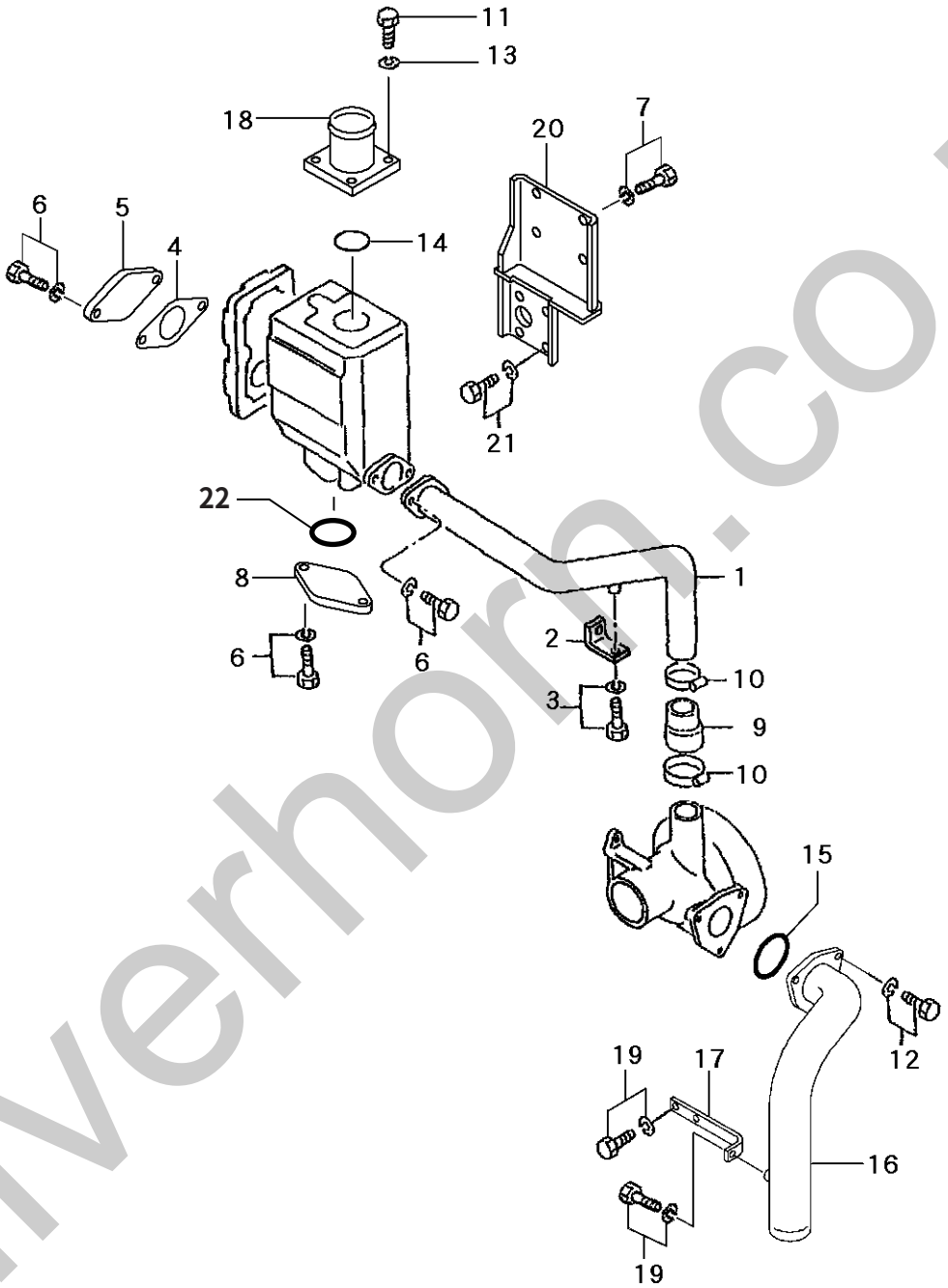

silverhorn.co.uk

46-02 COOLING SYSTEM(PART-1)

REF. -NO.	PART NO.	R/P	SENQG	PART NAME & DESCRIPTION		MODEL & QTY Y1TAA1			APPLICABLE SERIAL NO. FROM@-	-@UPTO	M/R	VRD
1	H3754614300			PIPE,BY-PASS		1						
2	H3754604400			STAY,BY-PASS PIPE		1						
3	HF180512025			BOLT,W/WASHER	B/W	1					A	
4	H3254636800		C	GASKET		1				-16863	A	
	H3254646800	31		GASKET		1						V
5	H3354606900			COVER		1						
6	HF180512030			BOLT,W/WASHER	B/W	6					A	
7	HF180510030			BOLT,W/WASHER	B/W	4					A	
8	H3754603500			COVER		1						
9	H3754614600			HOSE,RUBBER		1						
10	H0531750701			CLAMP,HOSE		2					A	
11	HF103510030			BOLT		4					A	
12	HF180512030			BOLT,W/WASHER	B/W	3					A	
13	HF251510000			WASHER,SPRING		4					A	
14	HF315307500			O-RING		1					A	
15	HF315310000			O-RING		1					A	
16	H3754703800			PIPE,WATER		1						
17	H3754703900			STAY,WATER		1						
18	H4573464300		C	PIPE,WATER		1						
	H4573464301	R1		PIPE,WATER		1						V
19	HF180512025			BOLT,W/WASHER	B/W	3					A	
20	H3754703600			BRACKET,THERMO CASE		1						
21	HF180512030			BOLT,W/WASHER	B/W	4					A	
22	HF315306000			O-RING		1					A	

silverhorn.co.uk

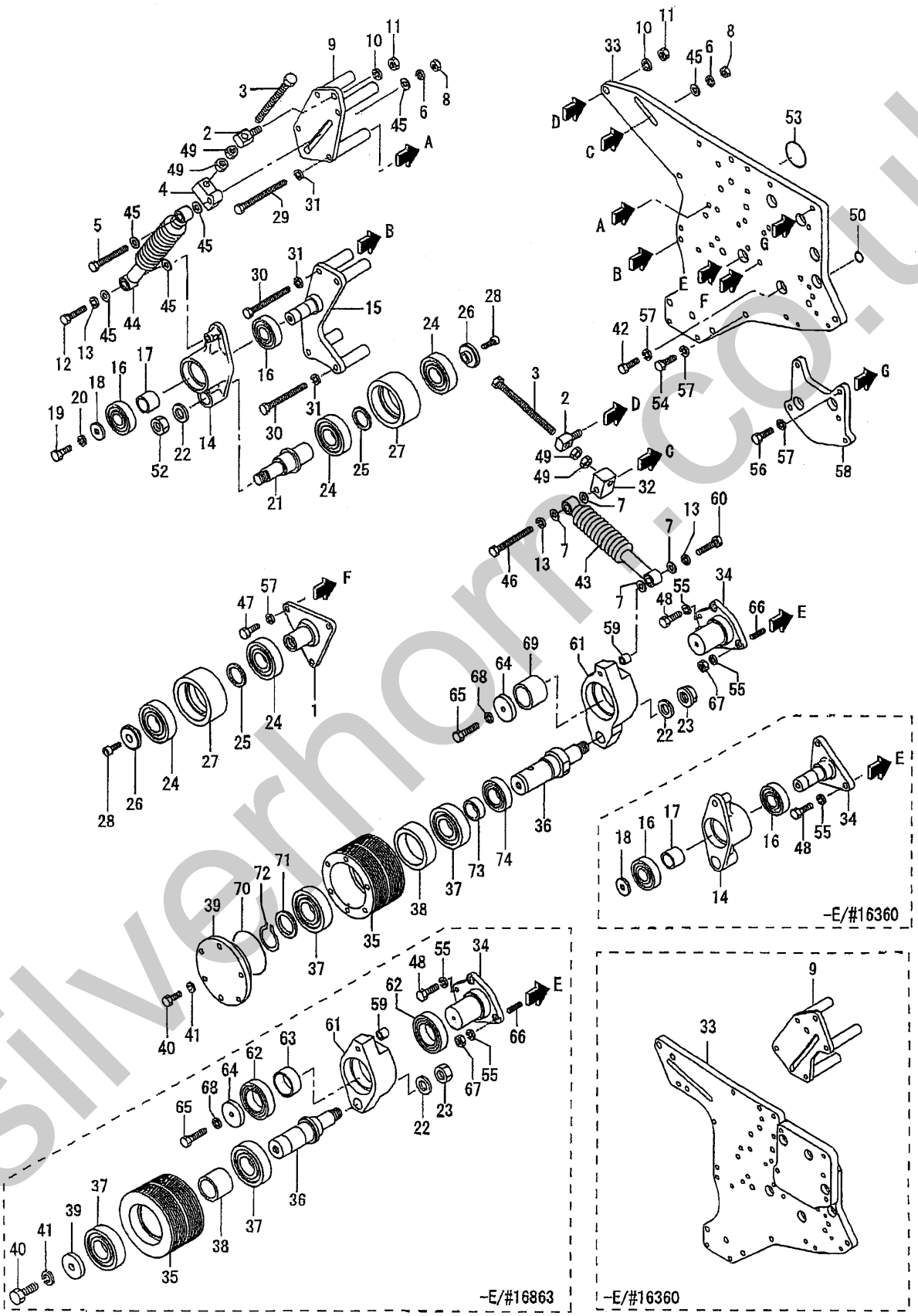

silverhorn.co.uk

46-03 AUTO TENSIONER

REF. -NO.	PART NO.	R/P	SENQG	PART NAME & DESCRIPTION	MODEL & QTY Y1TAA1			APPLICABLE SERIAL NO. FROM@-	-@UPTO	M/R	VRD
1	H3754514400			BRACKET,TENSION	1						
2	H3754807500			BOSS,TENSION	2						
3	H3754807600		C	BOLT,TENSION	2				-16360		
	H3754817600	3	1	BOLT,TENSION	2						V
4	H3754507400		C	BOSS,AUTO TENSION	1				-16360		
	H3754527400	3	1	BOSS,AUTO TENSION	1						V
5	HF103512095		C	BOLT	1				-16360	A	
	HF103512100	N	1C	BOLT	1			16361-	-16902	A	V
	H3264808800	3	2	BOLT	1			16361-			V
6	HF251512000			WASHER,SPRING	2					A	
7	HF250012000		C	WASHER,PLAIN	4				-16360	A	
	H3331101600	N	1	WASHER	4			16361-			V
8	HF230012000			NUT	2					A	
9	H3754517200		C	BRACKET,TENSION	1				-16360		
	H3754527200	N	1	BRACKET,TENSION	1			16361-			V
10	HF251514000			WASHER,SPRING	2					A	
11	HF230014000			NUT	2					A	
12	HF103512055		C	BOLT	1				-16902	A	
	H3264808700	3	1	BOLT	1						V
13	HF251512000			WASHER,SPRING	3					A	
14	H3754807900		Q	LEVER,TENSION	2				-16360		
	H3754807900		1	LEVER,TENSION	1			16361-			
15	H3754507100			BRACKET,TENSION	1						
16	H37A4802200		Q	BEARING,BALL	4				-16360		
	H37A4802200		1	BEARING,BALL	2			16361-			
17	H37A4802300		Q	SPACER	2				-16360		
	H37A4802300		1C	SPACER	1			16361-	-16456		
	H37A4812300	3	2	SPACER	1			16361-			V
18	H37A4802400		Q	PLATE,END	2				-16360		
	H37A4802400		1C	PLATE,END	1			16361-	-16456		
	H37A4802401	G	2	PLATE,END	1			16457-			V
19	HF103512035		C	BOLT	1				-16456	A	
	HF103512040	N	1	BOLT	1			16457-		A	V
20	HF251512000		C	WASHER,SPRING	1				-16456	A	
	H34A4802200	N	1	WASHER	1			16457-			V
21	H3754507300			SHAFT,TENSION	1						
22	H3250701400			WASHER	2					A	
23	HF232024000		C	NUT,JAM	1				16863-	A	
	H32A2002900	N	1	NUT,FLANGE	1			16864-			V
24	H3624805500			BEARING,BALL	4						
25	H3754504600			SPACER	2						
26	H3754514500			CAP,TENSION PULLEY	2						
27	H3754504200			PULLEY,TENSION	2						
28	HF121010030			BOLT,HEXAGON	2						
29	H0597812135			BOLT	4						
30	H0597812115			BOLT	4						
31	HF251512000			WASHER,SPRING	8						
32	H3754807400		C	BOSS,FAN TENSION	1				-16360		
	H3754527400	N	1	BOSS,FAN TENSION	1			16361-			V

silverhorn.co.uk

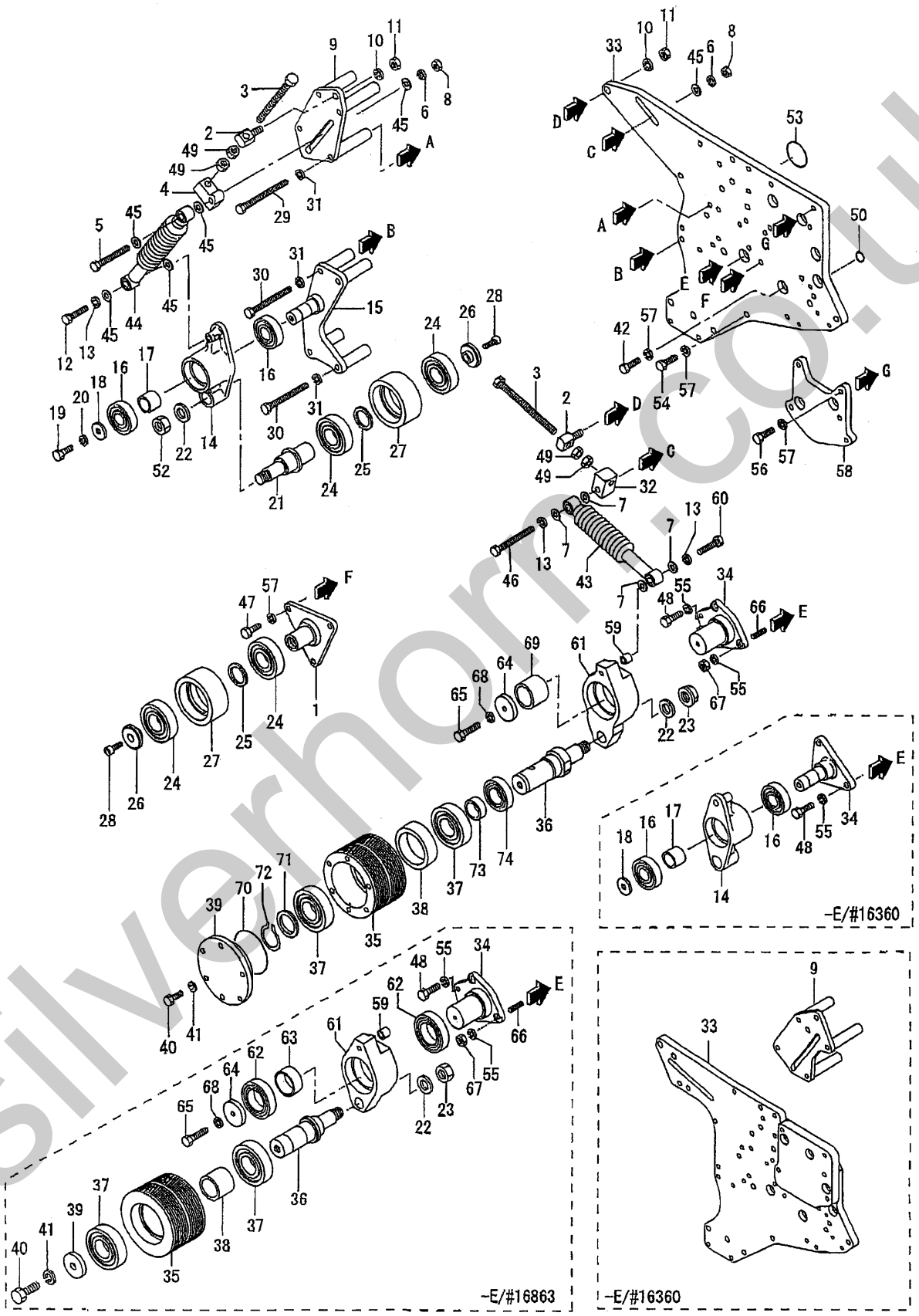

silverhorn.co.uk

REF. -NO.	PART NO.	R/P	SENQG	PART NAME & DESCRIPTION	MODEL & QTY Y1TAA1			APPLICABLE SERIAL NO. FROM@-	-@UPTO	M/R	VRD
33	H3754817100		C	PLATE,FAN DRIVE	1				-16360		
	H3754827100	N	1	PLATE,FAN DRIVE	1			16361-			V
34	*		C	BRACKET,TENSION	1						
	H3754817300	1	1C	BRACKET,TENSION	1				-16863		
	H3754837300	N	2	BRACKET,TENSION	1			16864-			V
35	H3754807200		C	PULLEY,TENSION	1				-16863		
	H3754807201	R	1C	PULLEY,TENSION	1				-16863		V
	H3754827200	N	2	PULLEY,TENSION	1			16864-			V
36	H37A4801600		C	SHAFT,TENSION	1				-16863		
	H37A4831600	N	1	SHAFT,TENSION	1			16864-			V
37	H37A4802700		C	BEARING,BALL	2				-16863		
	HF800506409	N	1	BEARING,BALL	2			16864-		A	V
38	H37A4802800		C	SPACER	1				-16456		
	H37A4812800	3	1C	SPACER	1				-16863		V
	H3754809100	N	2	SPACER	1			16864-			
39	H37A4802900		C	PLATE,END	1				-16456		
	H37A4802901	G	1C	PLATE,END	1			16457-	-16863		V
	H3264808500	N	2	COVER,BEARING	1			16864-			V
40	HF103516050		C	BOLT	1				-16456	A	
	HF103516055	N	1C	BOLT	1			16457-	-16863	A	V
	HF103508025	N	2	BOLT	6			16864-		A	V
41	HF251516000		C	WASHER,SPRING	1				-16456	A	
	H3120171800	N	1C	WASHER,SPRING	1			16457-	-16863	A	V
	HF251508000	N	2	WASHER,SPRING	6			16864-		A	V
42	HF103512025			BOLT	5					A	
43	H3754808200			SHOCK,ABSORBER	1						
44	H3754808100		C	SHOCK,ABSORBER	1				-16360		
	H3754808400	N	1C	SHOCK,ABSORBER	1			16361-			V
45	H3331101600			WASHER	6						
46	HF103512100		C	BOLT	1				-16360	A	
	HF103512110	N	1C	BOLT	1			16361-	-16902	A	V
	H3264809100	3	2	BOLT	1			16361-			V
47	HF103512030			BOLT	3					A	
48	HF103512035		C	BOLT	3				-16402	A	
	HF103512055	N	1	BOLT	2			16403-		A	V
49	HF232014000			NUT,JAM	4					A	
50	H0550710180			O-RING	1					A	
52	HF232024000			NUT,FLANGE	1					A	
53	H0550720650			O-RING	1					A	
54	HF103512040			BOLT	9					A	
55	HF251512000		Q	WASHER,SPRING	3				-16402	A	
	HF251512000		1	WASHER,SPRING	4			16403-		A	
56	HF103512060		A	BOLT	3			16361-		A	V
57	HF251512000		Q	WASHER,SPRING	17				-16360	A	
	HF251512000		1	WASHER,SPRING	20			16361-		A	
58	H3754808300		A	PLATE,FAN	1			16361-			V
59	H3066852600		A	SPACER	1			16361-			V
60	HF103512055		C	BOLT	1				-16360	A	
	HF103512065	3	1C	BOLT	1				-16902	A	V
	H3264808900	3	2	BOLT	1						V

silvermorn.co.uk

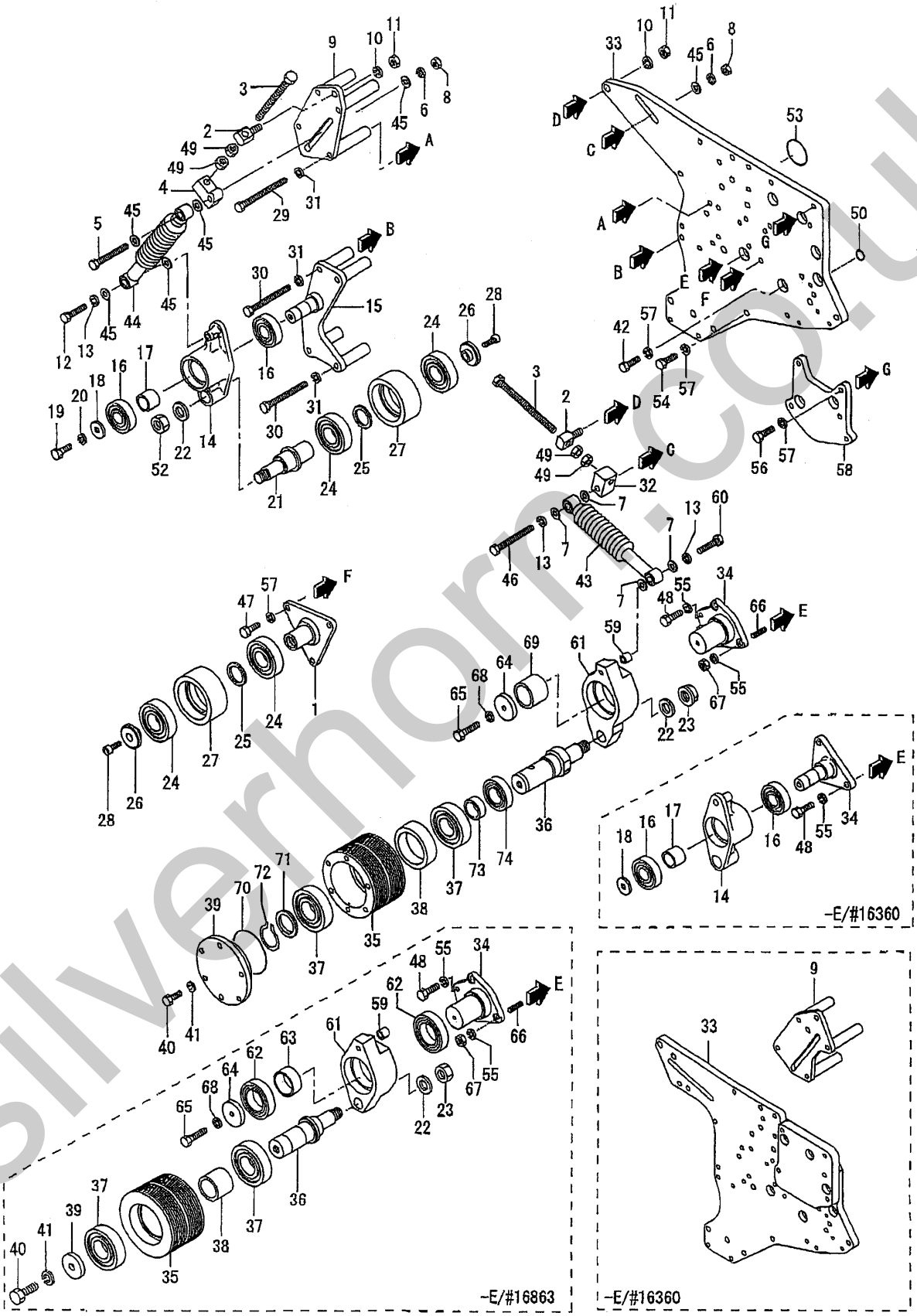

silverhorn.co.uk

REF. -NO.	PART NO.	R/P	SENQG	PART NAME & DESCRIPTION	MODEL & QTY Y1TAA1			APPLICABLE SERIAL NO. FROM@-	-@UPTO	M/R	VRD
61	H3754807900		C	LEVER,TENSION	1			16361-	-16402		
	H3264816700	G	1C	LEVER,TENSION	1			16403-	-16863		V
	H3754818700	G	2	IDLER ASSY	1			16864-			V
62	H37A4802200		C	BEARING,BALL	2			16361-	-16402		
	H3264816900	N	1	BEARING,BALL	2			16403-	-16863		V
63	H37A4802300		C	SPACER	1			16361-	-16402		
	H3264806600	N	1	SPACER	1			16403-	-16863		V
64	H37A4802400		C	PLATE,END	1			16361-	-16402		
	H3264806801	N	1C	PLATE,END	1			16403-	-16863		V
	H3754809200	N	2	PLATE,END	1			16864-			V
65	HF103512035		C	BOLT	1				-16456	A	
	HF103512040	G	1C	BOLT	1			16457-	-16863	A	V
	HF103512035	N	2	BOLT	1			16864-		A	V
66	H3754808600		C	STUD	2			16403-	-16863		
	H3754818600	N	1	STUD	2			16864-			V
67	HF230512000		A	NUT	2			16403-		A	V
68	HF251512000		C	WASHER,SPRING	1				-16456	A	
	H34A4802200	N	1	WASHER	1			16457-			V
69	H3264818100		A	BUSHING	1			16864-			V
70	H0550721150		A	O-RING	1			16864-			V
71	H3754818900		A	SPACER	1			16864-			V
72	HF320204500		A	RING,SNAP	1			16864-		A	V
73	H3264808400		A	SLEEVE	1			16864-			V
74	H3264808300		A	SEAL,OIL	1			16864-			V

silverhorn.co.uk

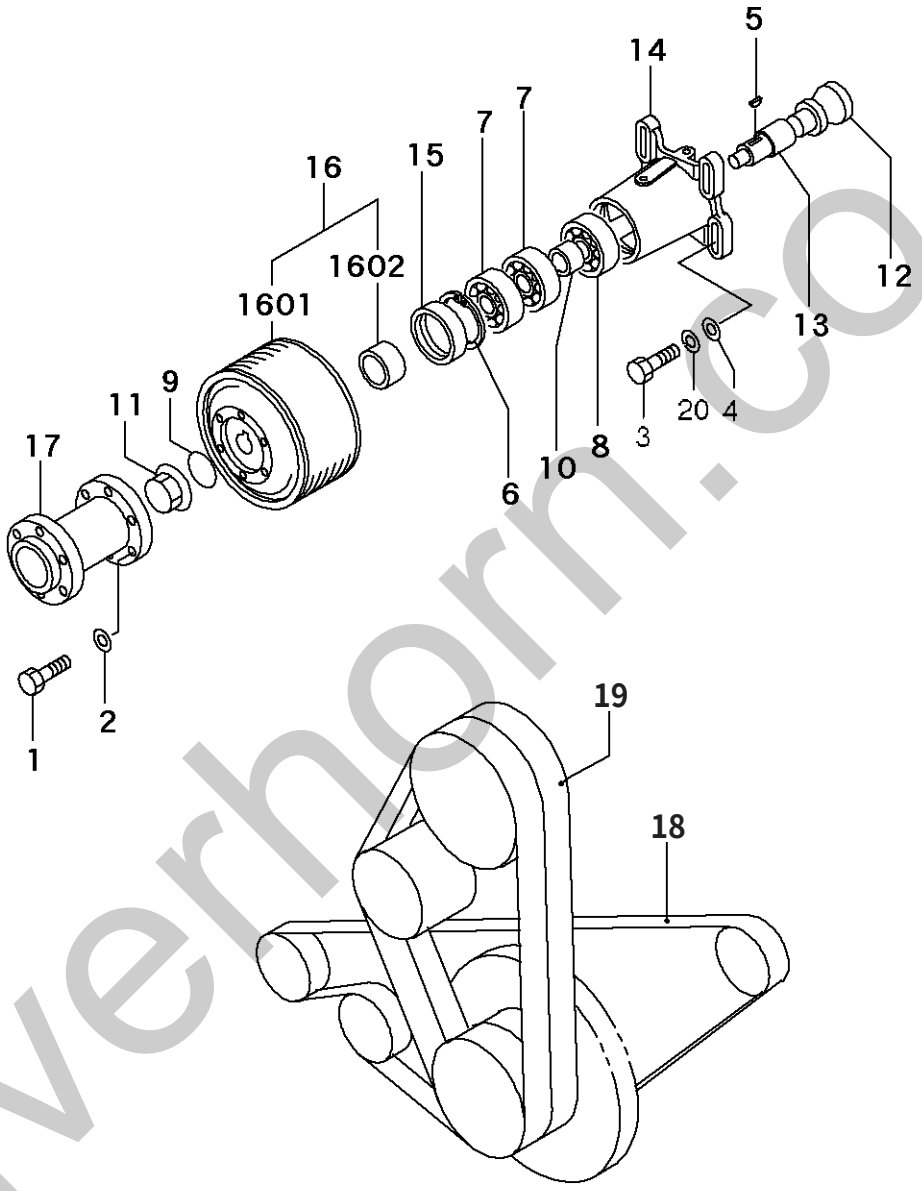

silverhorn.co.uk

REF. -NO.	PART NO.	R/P	SENQG	PART NAME & DESCRIPTION	MODEL & QTY Y1TAA1			APPLICABLE SERIAL NO. FROM@-	-@UPTO	M/R	VRD
1	HF103512035			BOLT	6					A	
2	H3752507900		C	WASHER	6				-16360		
	H34A4802200	N1		WASHER	6			16361-			V
3	HF103512050			BOLT	4					A	
4	H3331101600			WASHER	4						
5	HF287007022			KEY,WOODRUFF	1					A	
6	HF320211000			RING,SNAP	1					A	
7	HF800506408			BEARING,BALL	2						
8	HF801006309			BEARING,BALL	1						
9	H0550720550			O-RING	1					A	
10	H3234815300			SPACER	1						
11	H3254802900			NUT,CAP	1						
12	H3262500800			CAP,SEALING	1						
13	H3264801400			SHAFT,FAN DRIVE	1						
14	H3264821100			BRACKET,DRIVE	1						
15	H3622507500			SEAL,OIL	1					A	
16	H3754800030			PULLEY ASSY,FAN	1						
1601	*			PULLEY,FAN	1						
1602	H3264811600			SLEEVE	1						
17	H3754803300		C	SPACER,FAN	1						
	H3754803301	R1		SPACER,FAN	1						
18	H3754507600			VBELT,TENSION	1						
19	H3754807800			VBELT,FAN DRIVE	1						
20	HF251512000			WASHER,SPRING	4					A	

silverhorn.co.uk

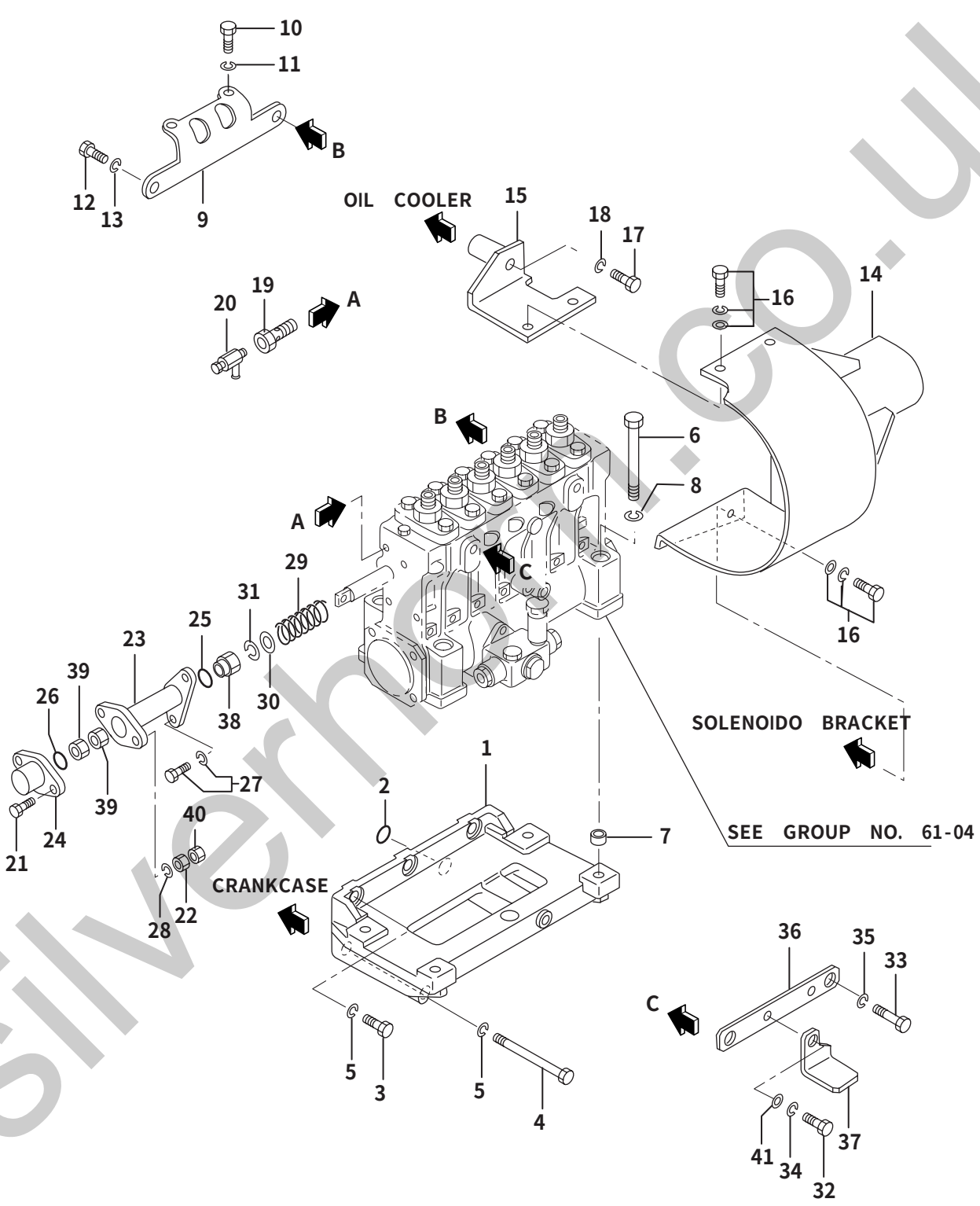

silverhoe.co.uk

61-01 FUEL INJECTION PUMP BRACKET

REF. -NO.	PART NO.	R/P	SENQG	PART NAME & DESCRIPTION		MODEL & QTY Y1TAA1			APPLICABLE SERIAL NO. FROM@-	-@UPTO	M/R	VRD
1	H3756121100			BRACKET,INJ PUMP		1						
2	H0550710140			O-RING NOT SHOWN		1					A	
3	HF103512035			BOLT		3					A	
4	H0597812150			BOLT		2					A	
5	HF251512000			WASHER,SPRING		5					A	
6	HF103512110			BOLT		4					A	
7	H3756101800			PIN,DOWEL		2					A	
8	HF251512000			WASHER,SPRING		4					A	
9	H3756110700		C	STAY,INJ PUMP		1						
	H3756110701	R	1	STAY,INJ PUMP		1						V
10	HF103512025			BOLT		2					A	
11	HF251512000			WASHER,SPRING		2					A	
12	HF103514030			BOLT		2					A	
13	HF251514000			WASHER,SPRING		2					A	
14	H3756143100			COVER,COUPLING		1						
15	H3756133200			BRACKET,COVER		1						
16	HF182508016			BOLT,W/WASHER	B/W	3					A	
17	HF103512075			BOLT		1					A	
18	HF251512000			WASHER,SPRING		1					A	
19	H4823005100			BOLT,EYE		1					A	
20	H3126251901			COCK,AIR PLUG		1						
21	HF103508035		C	BOLT		2					A	
	HF103508045	N	1	BOLT		2			16361-			
22	H3756405100		C	NUT,TAMPER PROOF		2				-16360		
	H3756405200	N	1	NUT,TAMPER PROOF		2			16361-			
23	H3756152800		C	CASE,SPRING		1				-17058		
	H3756162800	3	1	CASE,SPRING		1						V
24	H3756142900			CAP,RACK SET		1						
25	H0550710360			O-RING		1					A	
26	H0550710390			O-RING		1					A	
27	HF180508030			BOLT,W/WASHER	B/W	2					A	
28	HF251508000			WASHER,SPRING		2					A	
29	H3756111900			SPRING,RETURN		1						
30	HF250010000			WASHER,PLAIN		1					A	
31	HF251510000			WASHER,SPRING		1					A	
32	HF103510020			BOLT		1					A	
33	HF103514030			BOLT		2					A	
34	HF251510000			WASHER,SPRING		1					A	
35	HF251514000			WASHER,SPRING		2					A	
36	H3756204900			STAY,PUMP		1						
37	H3786204400			STAY,PUMP		1						
38	HF244510000			NUT,SELF LOCKING		1					A	
39	HF232508000			NUT,JAM		2					A	
40	HF230008000		C	NUT		2			16361-	-17058		
	HF244508000	3	1	NUT		2			16361-			V
41	H66E4604200		A	WASHER		1			16361-			V

silverhorn.co.uk

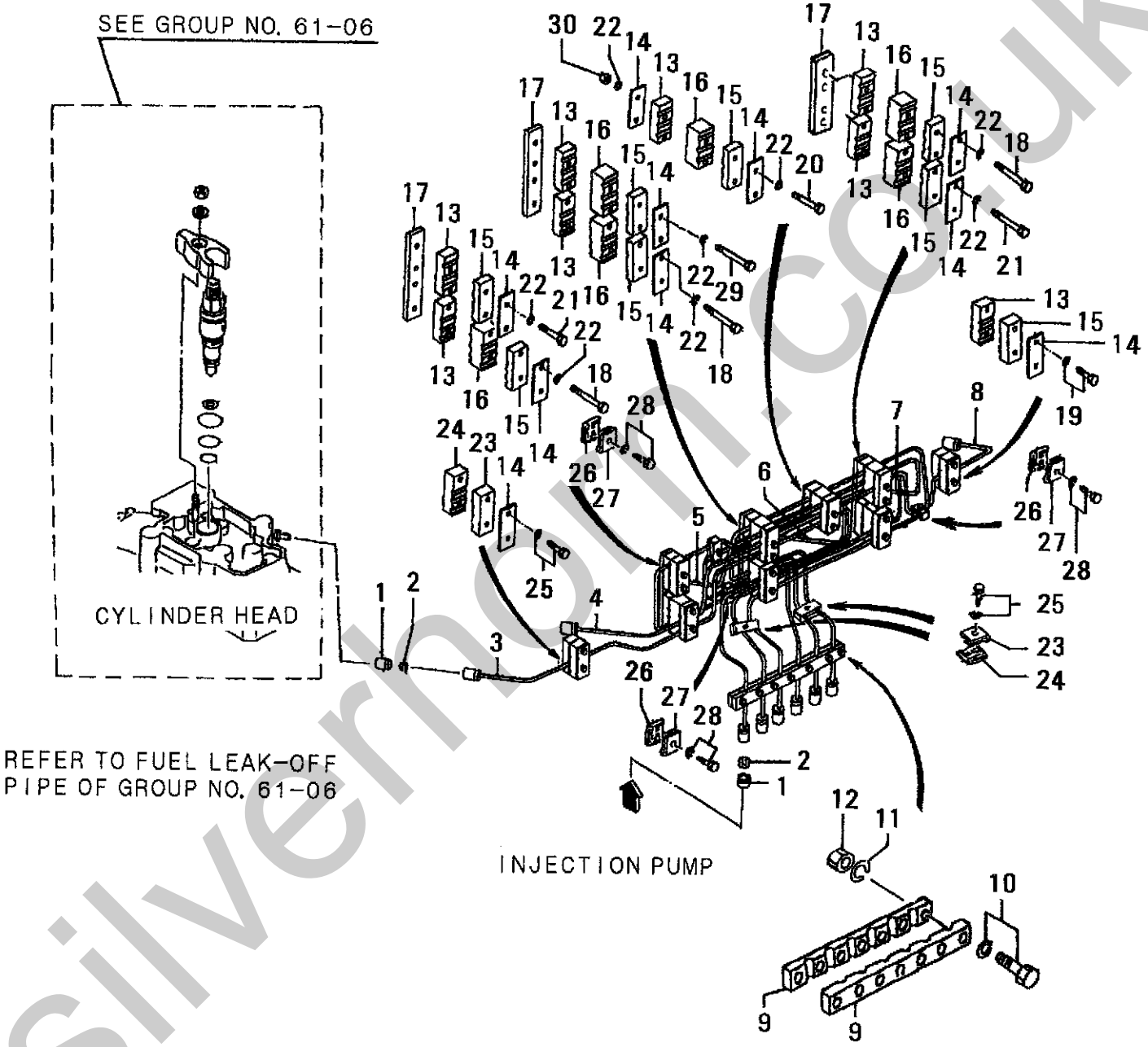

silverhorn.co.uk

REF. -NO.	PART NO.	R/P	SENQG	PART NAME & DESCRIPTION		MODEL & QTY Y1TAA1			APPLICABLE SERIAL NO. FROM@-	-@UPTO	M/R	VRD
1	H3756113500			COVER		12						
2	H3756113600			HOLDER		12						
3	H3756237100		C	PIPE,INJ NO.1		1				-16902		
	H3756247100	3	1	PIPE,INJ NO.1		1						V
4	H3756237200		C	PIPE,INJ NO.2		1				-16902		
	H3756247200	3	1	PIPE,INJ NO.2		1						V
5	H3756237300		C	PIPE,INJ NO.3		1				-16902		
	H3756247300	3	1	PIPE,INJ NO.3		1						V
6	H3756237400		C	PIPE,INJ NO.4		1				-16902		
	H3756247400	3	1	PIPE,INJ NO.4		1						V
7	H3756237500		C	PIPE,INJ NO.5		1				-16902		
	H3756247500	3	1	PIPE,INJ NO.5		1						V
8	H3756237600		C	PIPE,INJ NO.6		1				-16902		
	H3756247600	3	1	PIPE,INJ NO.6		1						V
9	H3756202800			CLAMP		2						
10	HF180508035			BOLT,W/WASHER	B/W	7					A	
11	HF251508000			WASHER,SPRING		7					A	
12	HF230008000			NUT,LOCK		7					A	
13	H3756203300			CLAMP,PIPE		8						
14	H3756215900			PLATE,CLAMP		9						
15	H3756203100			CLAMP		10						
16	H3756203400			SEAT,PIPE		6						
17	H3776103601			PLATE,CLAMP		3						
18	HF103510090			BOLT		6					A	
19	HF180510050			BOLT,W/WASHER	B/W	2					A	
20	HF103510080			BOLT		4					A	
21	HF103510055			BOLT		4					A	
22	HF251510000			WASHER,SPRING		16					A	
23	HMH020293			CLAMP		2					A	
24	HMH020294			CLAMP		2					A	
25	HF180506030			BOLT,W/WASHER	B/W	2					A	
26	HMH020258			CLAMP		3						
27	HMH020259			CLAMP		3						
28	HF180506030			BOLT,W/WASHER	B/W	3					A	
29	HF103510070			BOLT		2					A	
30	HF230010000			NUT		2					A	

silverhorn.co.uk

61-03 NOZZLE ASSY(SPRAY HOLE DIAMETER:0.31MM)

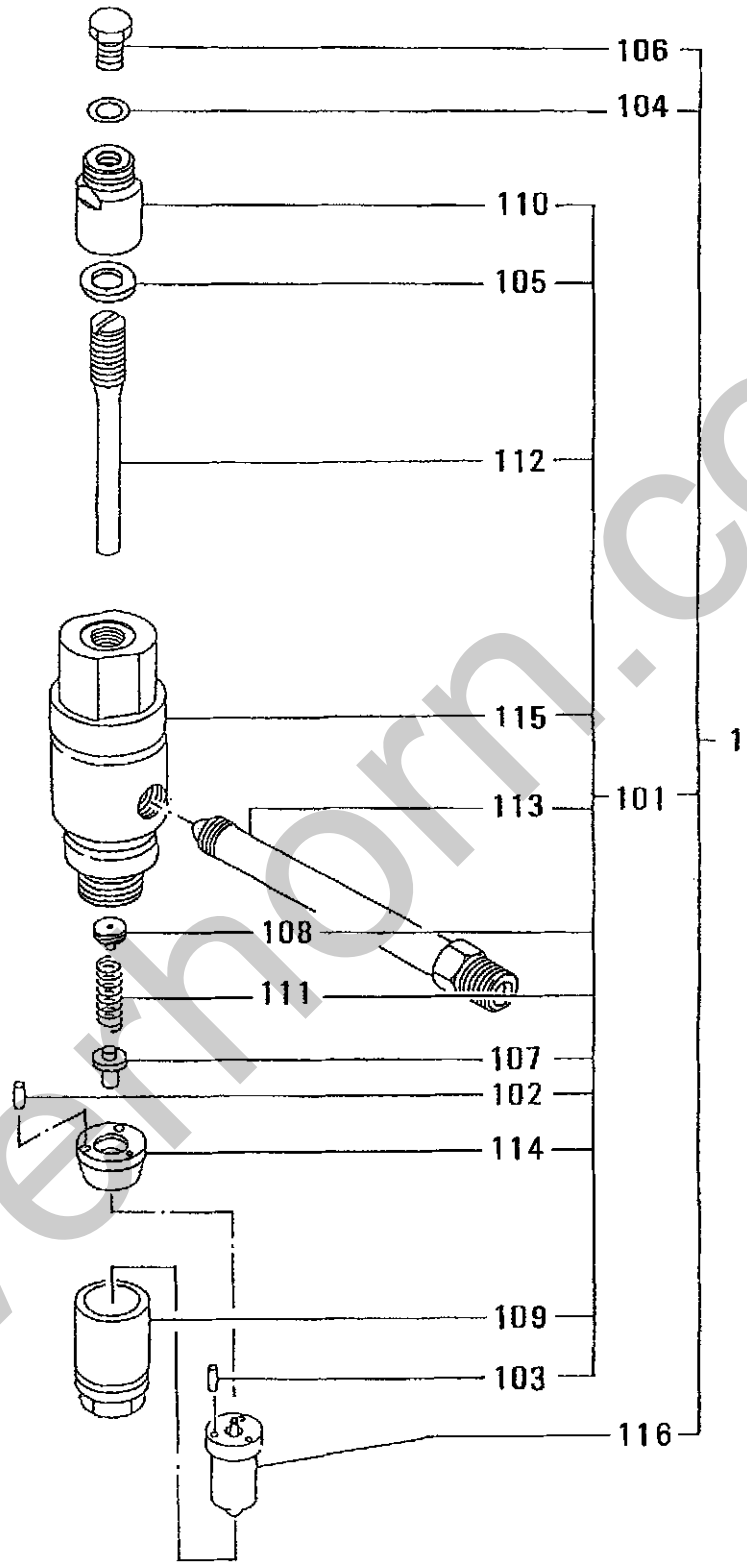

silverthorn.co.uk

61-03 NOZZLE ASSY(SPRAY HOLE DIAMETER:0.31MM)

REF. -NO.	PART NO.	R/P	SENQG	PART NAME & DESCRIPTION	MODEL & QTY Y1TAA1			APPLICABLE SERIAL NO. FROM@-	-@UPTO	M/R	VRD
1	H3756112000			NOZZLE ASSY	6						
101	H3756007010			HOLDER ASSY,NOZZLE	6						
102	HF800130014			BEARING,ROLLER	12						
103	HF800140014			BEARING,ROLLER	12						
104	H0594601001			WASHER,SEALING	6					A	
105	H0594601401			WASHER,SEALING	6					A	
106	H3340703900			SCREW,SET	6					A	
107	H3756103300			PUSHROD,NOZZLE	6						
108	H3756109300			SEAT,SPRING	6						
109	H3756116300			NUT,RETAINING	6						
110	H3756116600			NUT,CAP	6						
111	H3756126400			SPRING,NOZZLE	6						
112	H3756146500			SCREW,ADJUSTING	6					A	
113	H3756146700			CONNECTOR,INLET	6						
114	H3756167013			SPACER,NOZZLE	6						
115	H3756176100			BODY,NOZZLE HOLDER	6						
116	H3756107700			TIP ASSY,NOZZLE	6						

silverhorn.co.uk

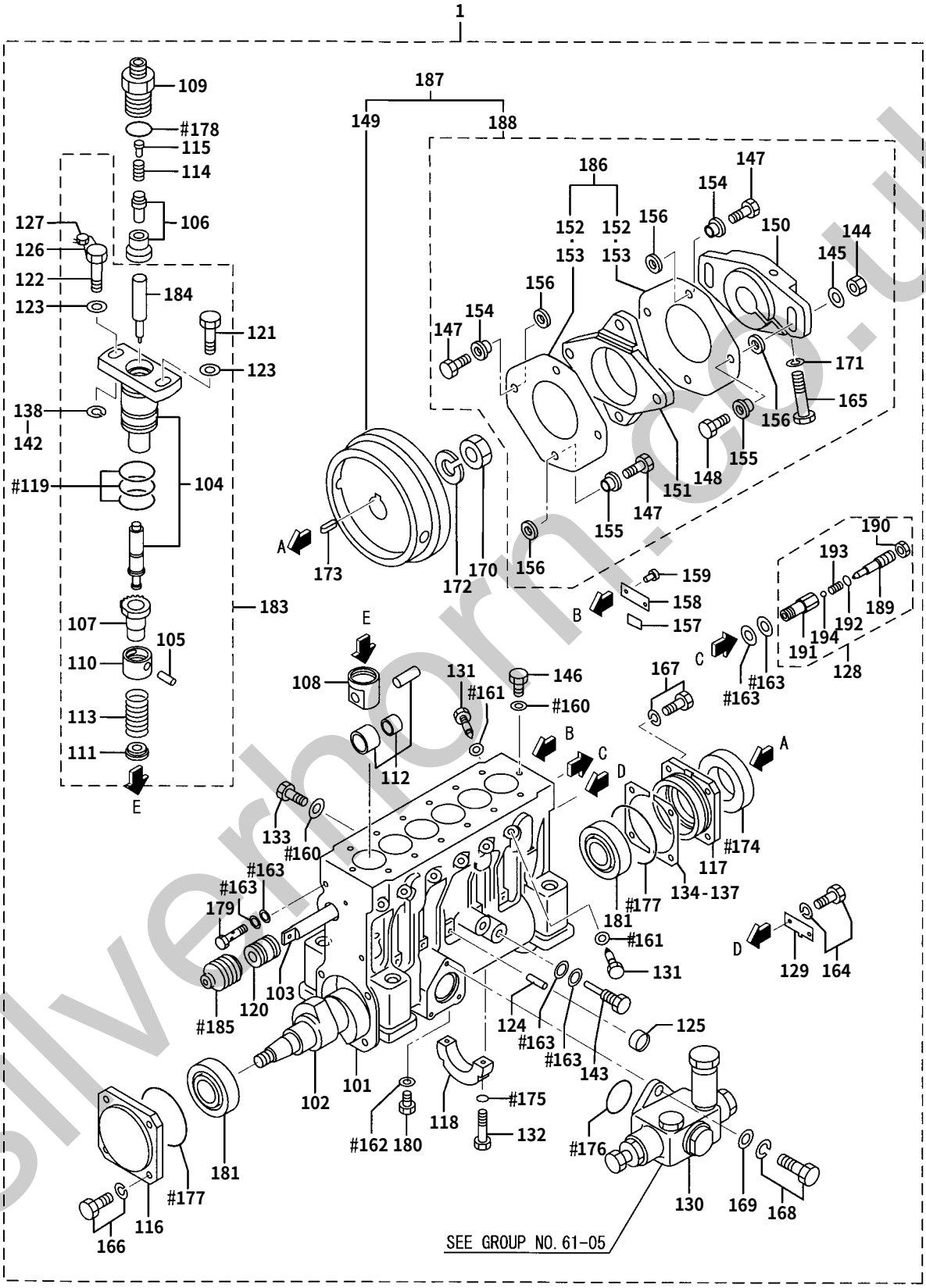

182 — 119,185,160,161,162,163,174,175,176,177,178
CONSISTS OF THE ITEMS WITH MARK"#"

silverhorn.co.uk

REF. -NO.	PART NO.	R/P	SENQG	PART NAME & DESCRIPTION		MODEL & QTY Y1TAA1			APPLICABLE SERIAL NO. FROM@-	-@UPTO	M/R	VRD
1	H4827300000		C	PUMP ASSY,INJ		1				-16752		
	H4828600001	31		PUMP ASSY,INJ		1						V
101	H4823020100		C	CASE,PUMP		1						
	H4823020101	R1		CASE,PUMP		1						V
102	H4821010201			CAMSHAFT		1						
103	H4821010300			RACK,CONTROL		1						
104	*			PLUNGER ASSY		6						
105	*			PIN,KNOCK		6						
106	H4827020010			VALVE ASSY,DELIVERY		6						
107	H4820228100			PINION		6						
108	H4820235900			TAPPET		6						
109	H4827014100			HOLDER,VALVE		6						
110	H4820221201			SEAT,UPPER SPRING		6						
111	H4820221300			SEAT,LOWER SPRING		6						
112	H4821000030		C	ROLLER ASSY,TAPPET		6				-16752		
	H48A1501000	31		ROLLER ASSY,TAPPET		6						V
113	H4820211700			SPRING,PLUNGER		6					A	
114	H4827011800			SPRING,VALVE		6					A	
115	H4827001900		C	STOPPER		6				-16752		
	H48A1600100	31		SEAT,SPRING		6						V
116	H4821035600			COVER,FRONT		1						
117	H4820212200		C	COVER,REAR		1				-16752		
	H4820222200	31		COVER,REAR		1						V
118	H4820202300			BEARING,CENTER		1						
119	H4820212400			O-RING		18					A	
120	H4820222500			BUSHING,RACK		2						
121	H4820202600			BOLT,BARREL		6						
122	H4820207600			BOLT,BARREL		6						
123	H4820222800			WASHER		12						
124	H4820202900			PIN		7					A	
125	H0482621000			CAP,SEALING		7						
126	H4820205800			WIRE,SEAL		1						
127	H4800096600			SEAL		1					A	
128	H4820234000		C	VALVE ASSY,CHECK		1				-16752		
	H4820244000	31		VALVE ASSY,CHECK		1						V
129	H4820223400			POINTER		1						
130	H0424500120			PUMP,FEED	SEE G/N 61-05	1						
131	H4820233600			BOLT,DEFLECTOR		12						
132	H4820223800			BOLT		2					A	
133	H4820233900			SCREW,SET		1						
134	H4820214100			SHIM,CASE	T=0.50	4						
135	H4820214200			SHIM,CASE	T=0.10	1						
136	H4820214300			SHIM,CASE	T=0.15	1						
137	H4820214400			SHIM,CASE	T=0.30	2						
138	H4820204500			SHIM,BARREL	T=0.80	1						
139	H4820204600			SHIM,BARREL	T=0.90	12						
140	H4820204700			SHIM,BARREL	T=1.00	1						
141	H4820204800			SHIM,BARREL	T=1.10	1						
142	H4802004900			SHIM,BARREL	T=1.30	1						

silverhorn.co.uk

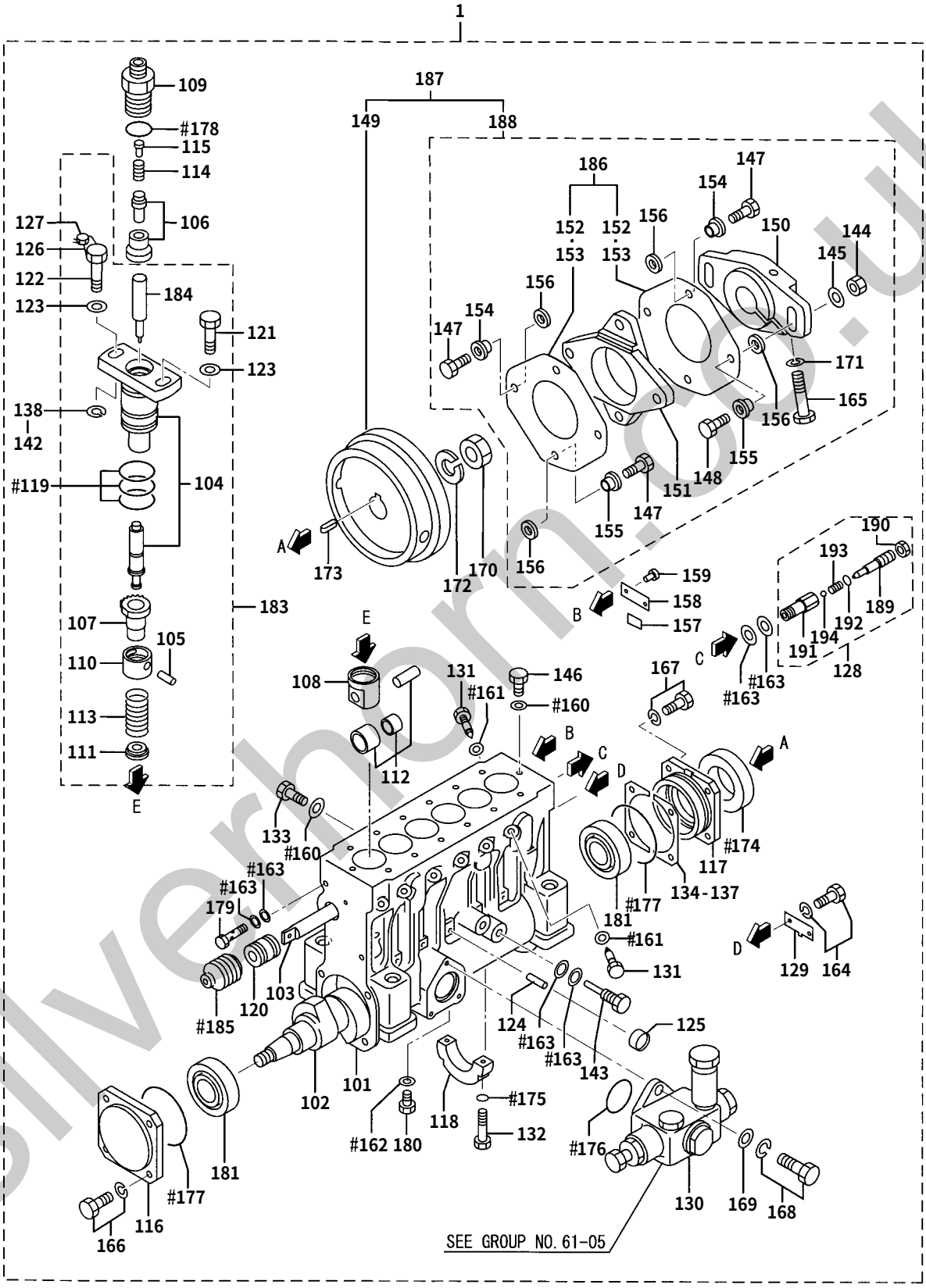

182 — 119,185,160,161,162,163,174,175,176,177,178
CONSISTS OF THE ITEMS WITH MARK"#"

silverhorn.co.uk

REF. -NO.	PART NO.	R/P	SENQG	PART NAME & DESCRIPTION		MODEL & QTY Y1TAA1			APPLICABLE SERIAL NO. FROM@-	-@UPTO	M/R	VRD
143	H4820205200		C	BOLT,EYE		1				-16752	A	
	HF461014000	31		BOLT,EYE		1						V
144	H4825005700			NUT,FLANGE		2						
145	H4825005600		C	WASHER,COUPLING		2				-16752		
	H4825005601	31		WASHER,COUPLING		2						V
146	H4820205500			BOLT,EYE		2					A	
147	H4825005800			BOLT,SHORT		6						
148	H4825005300			BOLT,LONG		2						
149	H4820820101		C	FLYWHEEL		1				-16752		
	H4825006100	31		FLYWHEEL		1						V
150	H4820811200		C	COUPLING		1				-16752		
	H4825006201	N1		COUPLING		1			16753-			V
151	H4820810301		C	COUPLING,CROSS		1				-16752		
	H4825006600	31		COUPLING,CROSS		1						V
152	H4820801400			PLATE,LAMINATE		4						
153	H4820810400			PLATE,LAMINATE		12						
154	H4820850500			BUSHING,LONG		4						
155	H4820850600			BUSHING,SHORT		4						
156	H4820830700			WASHER,COUPLING		8						
157	H3259824900			PLATE		1						
158	*			NAME-PLATE		1						
159	H0066502048			RIVET,SCREW		2						
160	H0594600801			WASHER,SEALING		3					A	
161	H0594601001			WASHER,SEALING		12					A	
162	H0594601201			WASHER,SEALING		1					A	
163	H0594601401			WASHER,SEALING		6					A	
164	HF180506012			BOLT,W/WASHER	B/W	2					A	
165	HF103514085			BOLT		1					A	
166	HF180508030		C	BOLT,W/WASHER	B/W	4				-16752	A	
	HF180508025	N1		BOLT,W/WASHER		4			16753-			V
167	HF180508025			BOLT,W/WASHER	B/W	4					A	
168	HF180506020			BOLT,W/WASHER	B/W	3					A	
169	HF250006000			WASHER,PLAIN		3					A	
170	HF232524000			NUT,JAM		1					A	
171	HF251514000		C	WASHER,SPRING		1				-16752		
	H48A1708100	N1		WASHER,SPRING		1			16753-			V
172	H3250701400			WASHER		1					A	
173	HF287007025			KEY,WOODRUFF		1						
174	H4820207100			SEAL,OIL		1					A	
175	H0550700080		C	O-RING		2				-16752	A	
	H0550710080	31		O-RING		2						V
176	HF315603500		C	O-RING		1				-16752	A	
	H0550720350	31		O-RING		1						V
177	HF315608000		C	O-RING		2				-16752	A	
	H0550720800	31		O-RING		2						V
178	H0550720250			O-RING		6					A	
179	H4823005100			BOLT,EYE		1					A	
180	HF500012000			PLUG,DRAIN		1						
181	HF814332207			BEARING,TAPER ROLLER		2						

silvermorn.co.uk

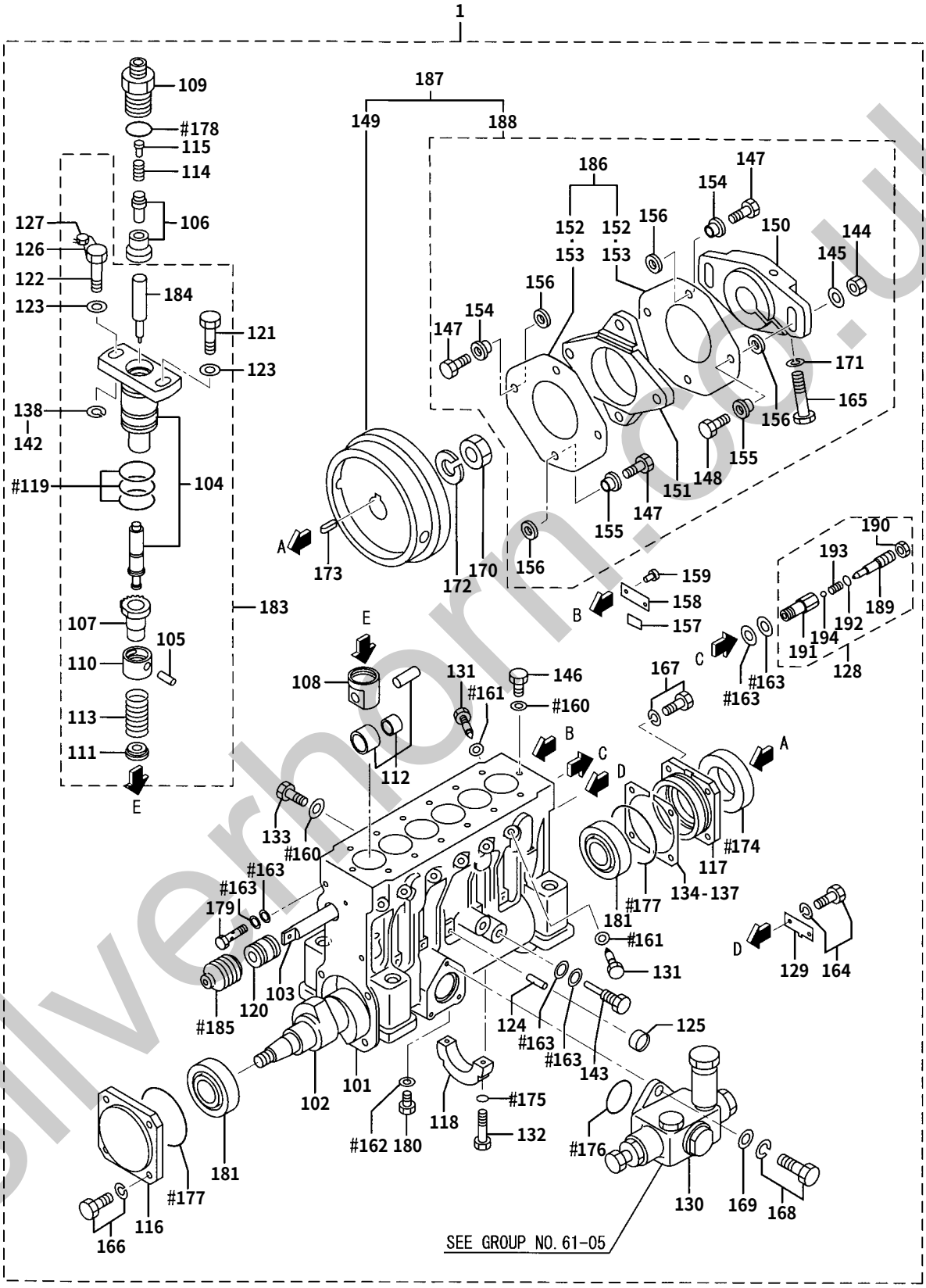

182 — 119,185,160,161,162,163,174,175,176,177,178
CONSISTS OF THE ITEMS WITH MARK"#"

silverhorn.co.uk

REF. -NO.	PART NO.	R/P	SENQG	PART NAME & DESCRIPTION		MODEL & QTY Y1TAA1			APPLICABLE SERIAL NO. FROM@-	-@UPTO	M/R	VRD
182	H4820229100		C	REPAIR KIT	CONSISTS OF "#"	1				-16752	A	
	H4820239100	31		REPAIR KIT		1						V
183	H4829123010		C	BLOCK,PLUNGER		6				-16752		
	H4829107030	N1		BLOCK,PLUNGER		6			16753-			V
184	H4829100301			HOLDER,PLUNGER		6						
185	H4820213500		A	BELLOWS		1			16753-			V
186	*		A	LAMINATE PLATE KIT		2						
187	H4820801061		A	COUPLING ASSY		1			16753-			V
188	H4820802061		A	COUPLING ASSY		1			16753-			V
189	H4820213200		A	SCREW		1			16753-			V
190	HF232012000		A	NUT,JAM		1			16753-			V
191	H4820253100		A	BODY,VALVE		1			16753-			V
192	H0550710050		A	O-RING		1			16753-			V
193	H4820203300		A	SPRING,VALVE		1			16753-			V
194	HF800008000		A	BALL,STEEL		1			16753-			V

silverhorn.co.uk

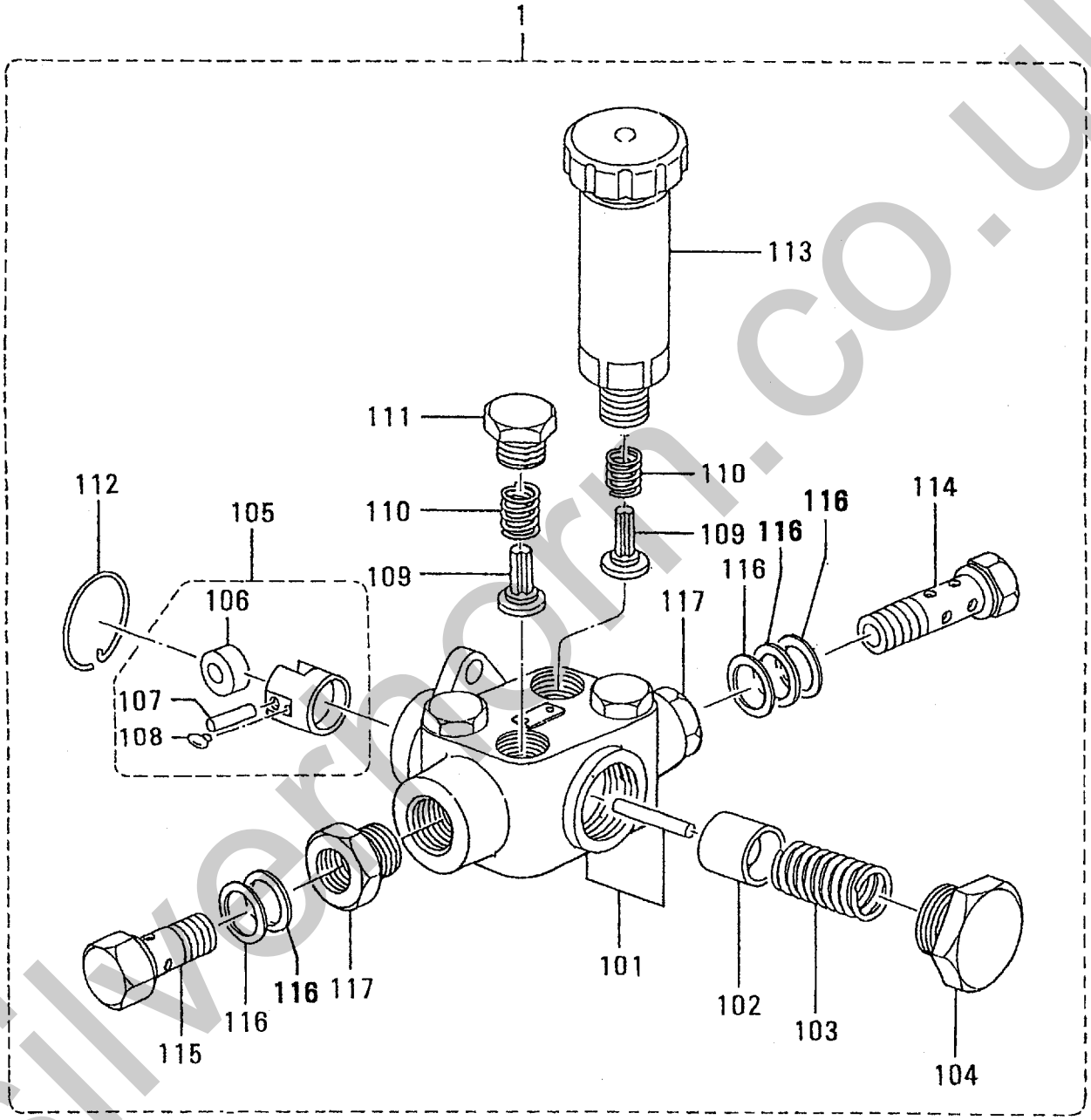

silverhorn.co.uk

61-05 FEED PUMP

REF. -NO.	PART NO.	R/P	SENQG	PART NAME & DESCRIPTION	MODEL & QTY Y1TAA1			APPLICABLE SERIAL NO. FROM@-	-@UPTO	M/R	VRD
1	H0424500120			PUMP,FEED	1						
101	H1520021720			HOUSING	1						
102	H1521001120			PISTON	1					A	
103	H1521040100			SPRING,PISTON	1						
104	H1521050400			PLUG	1					A	
105	H1521111920			TAPPET ASSY	1						
106	H1521120100			ROLLER	1						
107	H1521130700			PIN	1					A	
108	H1521140400			GUIDE	2						
109	H1521150200			VALVE	4						
110	H1521160200			SPRING	4					A	
111	H1521170100			PLUG	3					A	
112	H1521210200			RING,SNAP	1					A	
113	H1522005620			PUMP,PRIMING	1						
114	H1523004020			BOLT,EYE	1					A	
115	H0297314570			BOLT,EYE	1					A	
116	H0293414130			WASHER,SEALING	5					A	
117	H1523101300			ADAPTER	2						

silverhorn.co.uk

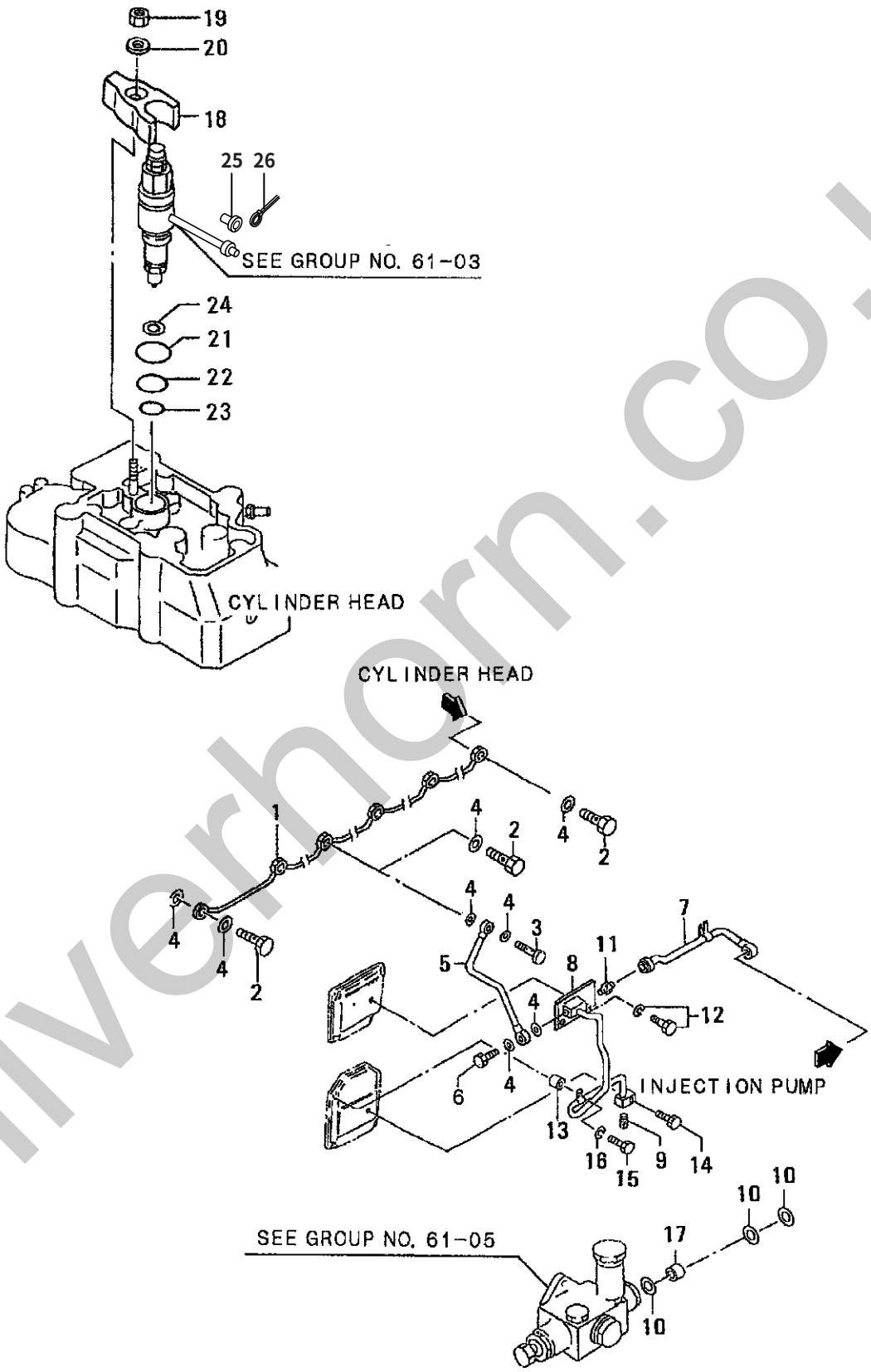

silverhorn.co.uk

61-06 FUEL LEAK-OFF PIPE

REF. -NO.	PART NO.	R/P	SENQG	PART NAME & DESCRIPTION		MODEL & QTY Y1TAA1			APPLICABLE SERIAL NO. FROM@-	-@UPTO	M/R	VRD
1	H3756104100			PIPE,FUEL LEAKOFF		1						
2	H3253609400			BOLT,EYE		5						
3	H34A3626100			BOLT,EYE		1					A	
4	H0594601001			WASHER,SEALING		15					A	
5	H3756123800			PIPE,FUEL LEAKOFF		1						
6	HF411010000			BOLT,EYE		1					A	
7	H3756134200			PIPE,FUEL LEAKOFF		1						
8	H3756124300			PIPE,FUEL LEAKEND		1						
9	HF500617000			PLUG,TAPERED		1					A	
10	H0594601401			WASHER,SEALING		3					A	
11	HF454010000			CONNECTOR		1						
12	HF180512025			BOLT,W/WASHER	B/W	2					A	
13	H5831303100			SPACER		1						
14	HF103510045			BOLT		1					A	
15	HF103512045			BOLT		1					A	
16	HF251512000			WASHER,SPRING		1					A	
17	H3756103700			SPACER		1						
18	H3756101602			GLAND,NOZZLE		6						
19	HF230514000			NUT		6					A	
20	H3356114500			WASHER		6					A	
21	H0550710420			O-RING		6					A	
22	H0550710340			O-RING		6					A	
23	H0550710260			O-RING		6					A	
24	H3756116800			GASKET,NOZZLE		6					A	
25	H3756108800		A	BUSHING		1			16570-			V
26	H0531800300		A	BAND,CLIP		1			16570-			V

silverhorn.co.uk

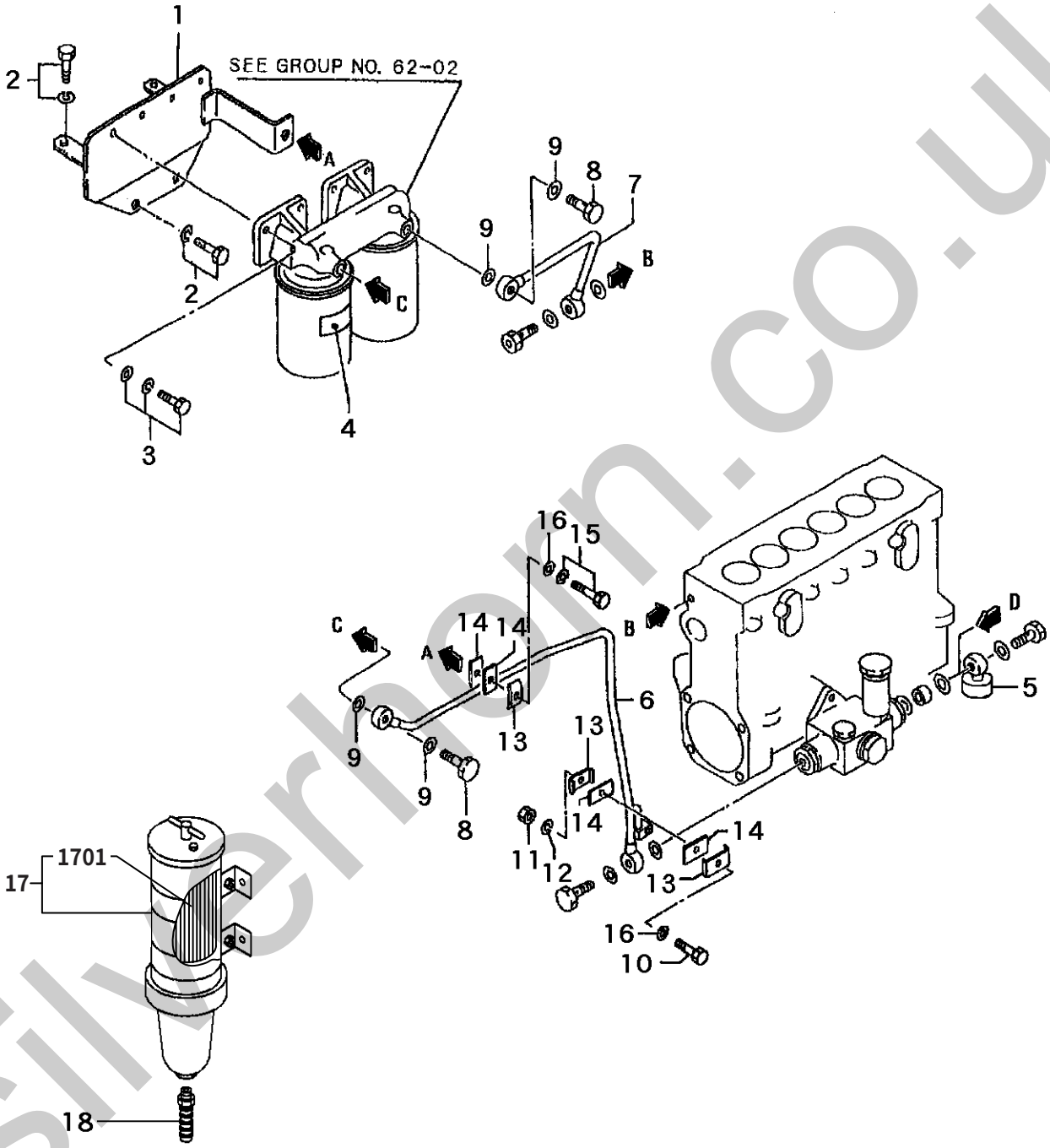

silverhorn.co.uk

62-01 FUEL FILTER PIPING

REF. -NO.	PART NO.	R/P	SENQG	PART NAME & DESCRIPTION		MODEL & QTY Y1TAA1			APPLICABLE SERIAL NO. FROM@-	-@UPTO	M/R	VRD
1	H3756220201			BRACKET,FUEL FILTER		1						
2	HF180512025			BOLT,W/WASHER	B/W	4					A	
3	HF182510025			BOLT,W/WASHER	B/W	4					A	
4	H3256200800			LABEL,CAUTION		1						
5	H4568050200			CONNECTOR		1						
6	H3756211100			PIPE,FUEL		1						
7	H3756221200			PIPE,FUEL		1						
8	HF461014000			BOLT,EYE		2					A	
9	H0594601401			WASHER,SEALING		4					A	
10	HF103510035			BOLT		1					A	
11	HF230010000			NUT		1					A	
12	HF251510000			WASHER,SPRING		1					A	
13	H3726101700			CLAMP		3						
14	H3726101800			SEAT		4						
15	HF180510035			BOLT,W/WASHER	B/W	1					A	
16	HF250010000			WASHER,PLAIN		2					A	
17	H4730203501		C	SEPARATOR,FUEL		1				-16752		
	H4730205502	31		SEPARATOR,FUEL		1						V
1701	H4730213500			ELEMENT		1					A	
18	H4730209300			NIPPLE		1						

silverhorn.co.uk

62-02 FUEL FILTER ASSY

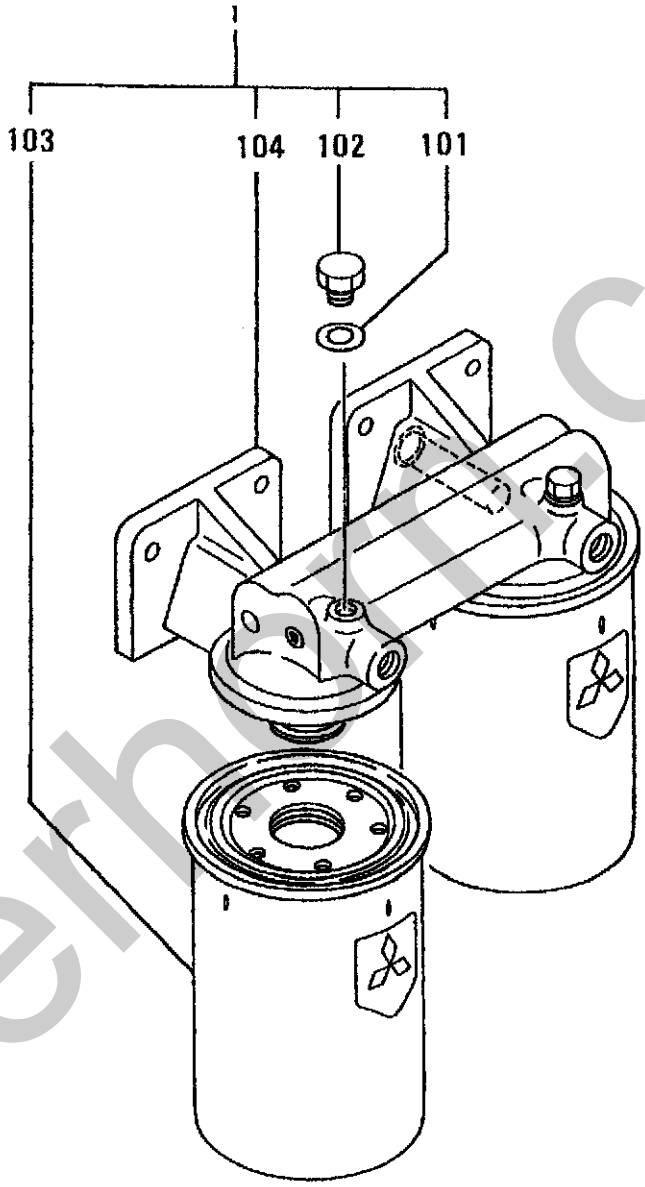

silverhill.co.uk

62-02 FUEL FILTER ASSY

REF. -NO.	PART NO.	R/P	SENQG	PART NAME & DESCRIPTION	MODEL & QTY Y1TAA1			APPLICABLE SERIAL NO. FROM@-	-@UPTO	M/R	VRD
1	H3756260100			FILTER ASSY,FUEL	1						
101	H0594600801			WASHER,SEALING	2					A	
102	H3256200115			PLUG,AIR	2					A	
103	H3256260300			ELEMENT,CARTRIDGE	2						
104	H3756210111			BRACKET ASSY	1						

silverhorn.co.uk

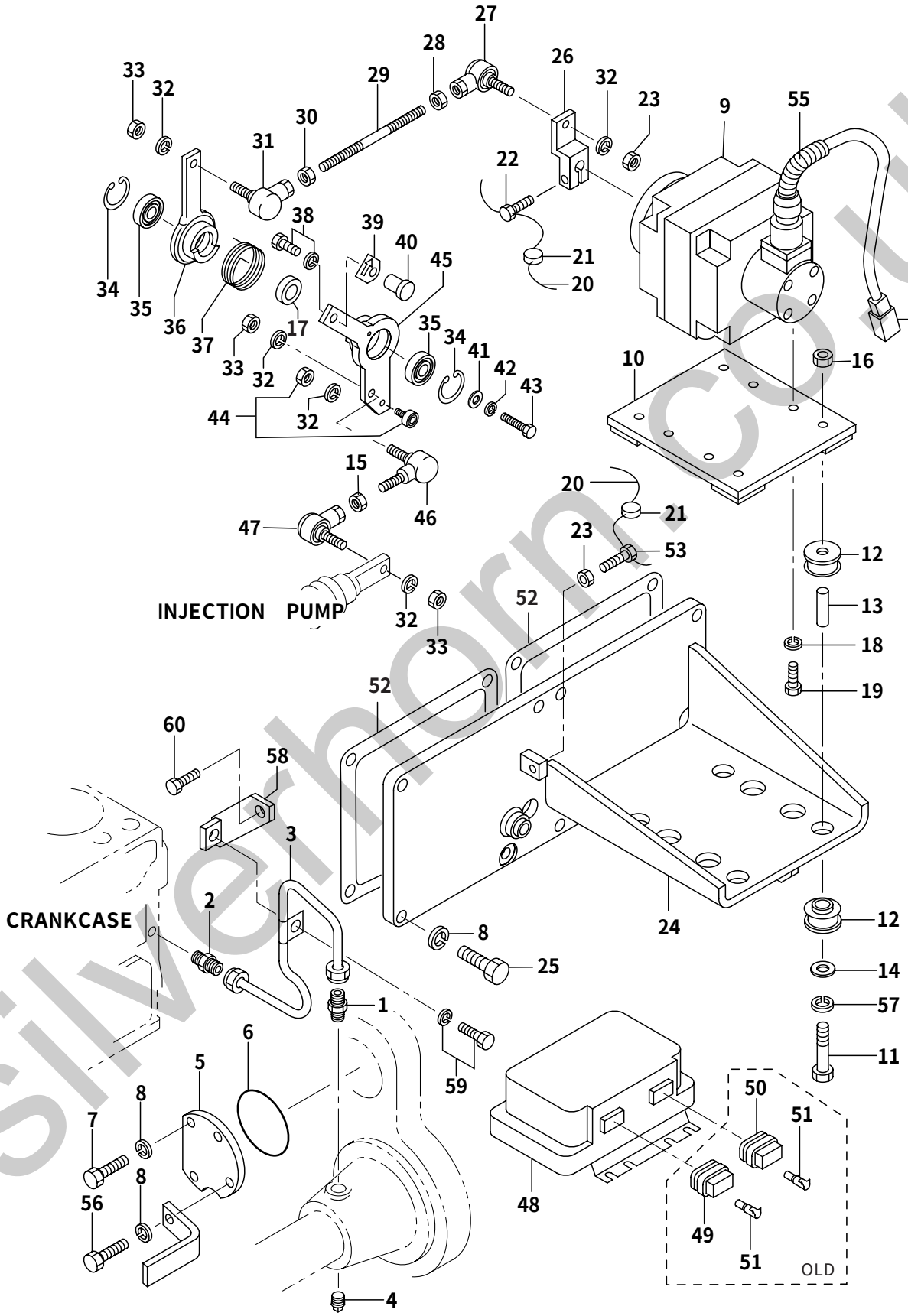

silverhorn.co.uk

63 ACTUATOR CONTROL

REF. -NO.	PART NO.	R/P	SENQG	PART NAME & DESCRIPTION		MODEL & QTY Y1TAA1			APPLICABLE SERIAL NO. FROM@-	-@UPTO	M/R	VRD
1	HF454008000			CONNECTOR		1						
2	H4750055701			CONNECTOR		1						
3	H3753658700		C	PIPE,OIL		1				-17160		
	H3753668700	G	1	PIPE,OIL		1			17161-			V
4	HF500613000			PLUG,TAPERED		1					A	
5	H4750039900			COVER		1						
6	H0550721450			O-RING		1					A	
7	HF103512035			BOLT		3					A	
8	HF251512000			WASHER,SPRING		8					A	
9	H3786320210		C	ACTUATOR,PROACT		1				-16706		
	H3786330210	3	1	ACTUATOR,PROACT		1						V
10	H3756305800		C	PLATE,PROACT		1						
	H3756305801	R	1	PLATE,PROACT		1						V
11	HF180508065			BOLT		4					A	
12	H0805100200			MOUNT,CUSHION		8						
13	H34A6304500			SPACER		4						
14	H9126207700			WASHER		4						
15	HF230008000			NUT		1					A	
16	H3776306400			NUT,LOCK		4						
17	H9136503200			SPACER		1						
18	HF251510000			WASHER,SPRING		4					A	
19	H3776305500			BOLT		4						
20	H3446107700		C	WIRE		2				-16950		
	H35A6109900	3	1	WIRE		2						V
21	H4800096600			SEAL		2						
22	HF111508030		Q	BOLT,LOCKING WIRE		2				-16360		
	HF111508030		1C	BOLT,LOCKING WIRE		1				-16432		
	H3756108501	3	2	BOLT,LOCKING WIRE		1						
23	H3306311400			NUT		2						
24	H3756315700			BRACKET,ACTUATOR		1						
25	HF103512035			BOLT		8					A	
26	H3756305600		C	LEVER,THROTTLE		1				-16360		
	H3756305601	3	1	LEVER,THROTTLE		1						
27	H35A6138600			JOINT,BALL		1					A	
28	HF232008000			NUT,JAM		1						
29	H0590208135			ROD		1						
30	H35A6138700			JOINT,BALL		1						
31	H0941300800			NUT,LOCK		1						
32	HF251508000			WASHER,SPRING		5					A	
33	H3306311400			NUT		3						
34	HF320203200			RING,SNAP		2					A	
35	*		C	BEARING,BALL		2						
	H3756300900	1	1	BEARING,BALL		2						V
36	H3756306700		C	LEVER,CANCEL		1				-16502		
	H3756316700	3	1	LEVER,CANCEL		1						V
37	H3776127400			SPRING		1						
38	HF180508020			BOLT,W/WASHER	B/W	1					A	
39	H4594030200			PLATE,CAUTION		1						
40	H5177603000			GRIP		1						
41	H9144604200			WASHER		1						

Silverhorn.co.uk

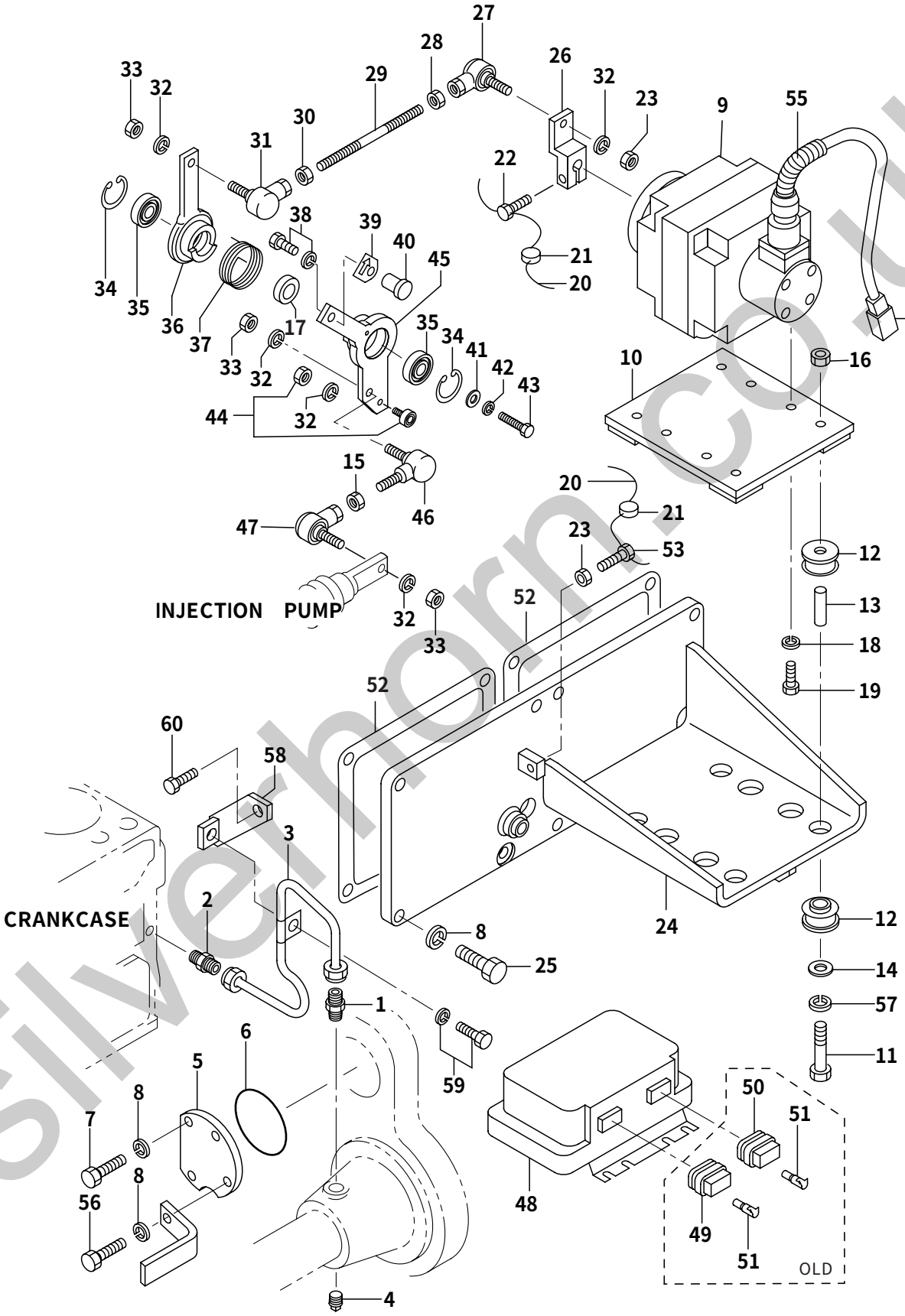

silverhorn.co.uk

REF. -NO.	PART NO.	R/P	SENQG	PART NAME & DESCRIPTION		MODEL & QTY Y1TAA1			APPLICABLE SERIAL NO. FROM@-	-@UPTO	M/R	VRD
42	HF251512000			WASHER,SPRING		1					A	
43	H3756305300			BOLT		1						
44	H4529820800			FOLLOWER		1						
45	H3756316800		C	LEVER,CANCEL		1				-16502		
	H3756326800	31		LEVER,CANCEL		1						V
46	H3756315400			JOINT,BALL		1						
47	H35A6138600			JOINT,BALL		1						
48	H3756309500		C	CONTROLLER		1				-16360		
	H3756319500	N1	C	CONTROLLER		1			16361-	-16528		
	H3756329500	N2		CONTROLLER		1			16529-			V
49	H3786300500		D	CONNECTOR		1				-16306		
50	H3786300400		D	CONNECTOR		1				-16306		
51	H3786300600		D	PIN,CONNECTOR		46				-16306		
52	H4750033100			PACKING		2					A	
53	H3756108501		A	BOLT,LOCKING WIRE		1			16433-			
54	H3759210900		A	CONNECTOR ASSY		1			16707-			V
55	H3786311100		A	CAP,PROACT		1			16707-			V
56	HF103512040		A	BOLT		1			16361-			V
57	HF251508000		A	WASHER,SPRING		4			16361-			V
58	H3753604900		A	STAY		1			17161-			V
59	HF180510016		A	BOLT,W/WASHER	B/W	1			17161-			V
60	HF103512050		A	BOLT		1			17161-			V

silverhorn.co.uk

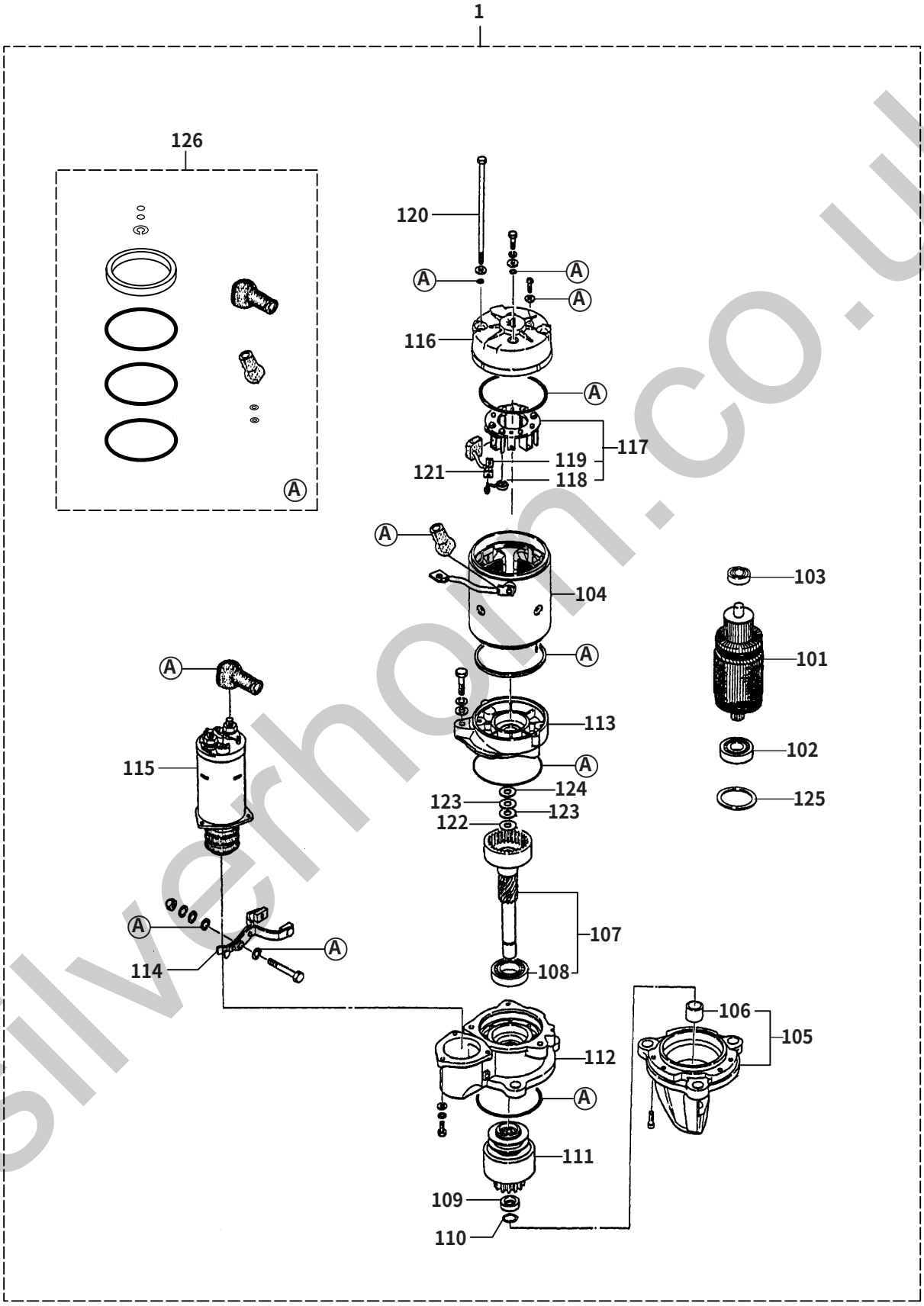

silverhorn.co.uk

REF. -NO.	PART NO.	R/P	SENQG	PART NAME & DESCRIPTION		MODEL & QTY Y1TAA1			APPLICABLE SERIAL NO. FROM@-	-@UPTO	M/R	VRD
1	H3756600500			STARTER	NKC	2						
101	H0231000231			ARMATURE		2						
102	H1045662047			BEARING,BALL		2						
103	H1045662007			BEARING,BALL		2						
104	H0232000150			YOKE ASSY		2						
105	H0233101700			BRACKET,FRONT		2						
106	H7233510080			METAL		2						
107	H7231200090			SHAFT ASSY		2						
108	H1045660067			BEARING,BALL		2						
109	H1231810020			STOPPER,PINION		2						
110	H1239140020			RING,CLIP		2						
111	H0235000440			CLUTCH ASSY		2						
112	H1236000080			BRACKET ASSY		2						
113	H1236110080			BRACKET,CENTER		2						
114	H1233200190			LEVER,SHIFT		2						
115	H0471003420			SWITCH ASSY		2						
116	H0237110221			BRACKET,REAR		2						
117	H7237500020			HOLDER,BRUSH		2						
118	H1239130040			SPRING,BRUSH		8						
119	H1237400050			BRUSH		8						
120	H0090014380			BOLT		4						
121	H1259222800			PLATE		8						
122	H1239210130			WASHER		2						
123	H1239210140			WASHER		4						
124	H1239410040			WASHER,INSULATE		2						
125	H0239210230			WASHER		2						
126	H7092101470			SEAL ASSY		2						

silverhorn.co.uk

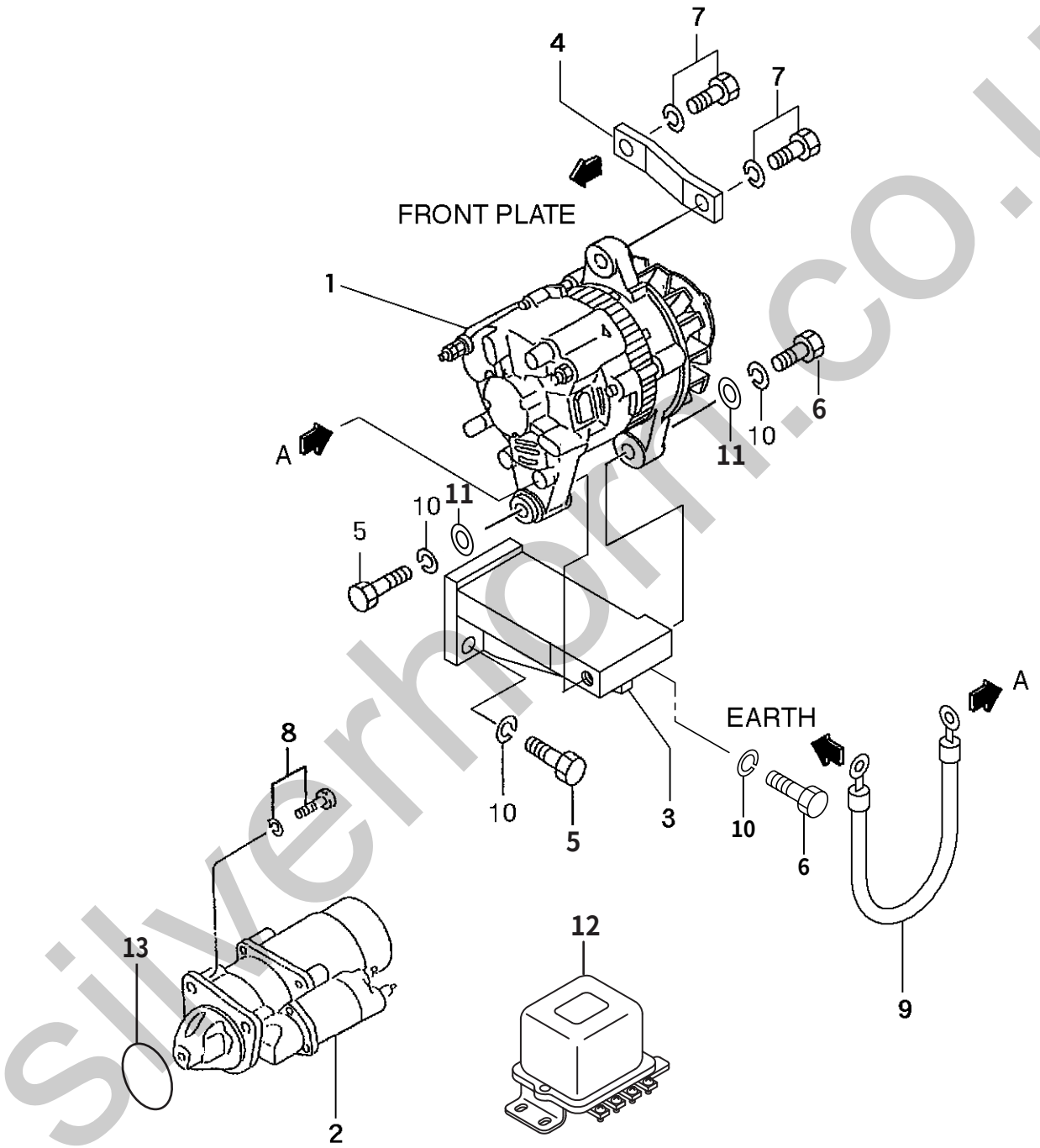

silverhorn.co.uk

68-01 ALTERNATOR GENERAL

REF. -NO.	PART NO.	R/P	SENQG	PART NAME & DESCRIPTION		MODEL & QTY Y1TAA1			APPLICABLE SERIAL NO. FROM@-	-@UPTO	M/R	VRD
1	H0434349100			ALTERNATOR	24V-80A	1						
2	H3756600500			STARTER	24V-7.5KW	2						
3	H3756807500			BRACKET		1						
4	H3756807600			STAY		1						
5	HF103512040			BOLT		2					A	
6	HF103512035			BOLT		2					A	
7	HF180512030			BOLT,W/WASHER	B/W	2					A	
8	HF180512035			BOLT,W/WASHER	B/W	6					A	
9	H3789000900			CABLE,EARTH		1						
10	HF251512000			WASHER,SPRING		4						
11	HF250012000			WASHER,PLAIN		2						
12	H0432240010			RELAY,MAGNETIC		1			16361-			V
13	HF315009500			O-RING		2						V

silverhorn.co.uk

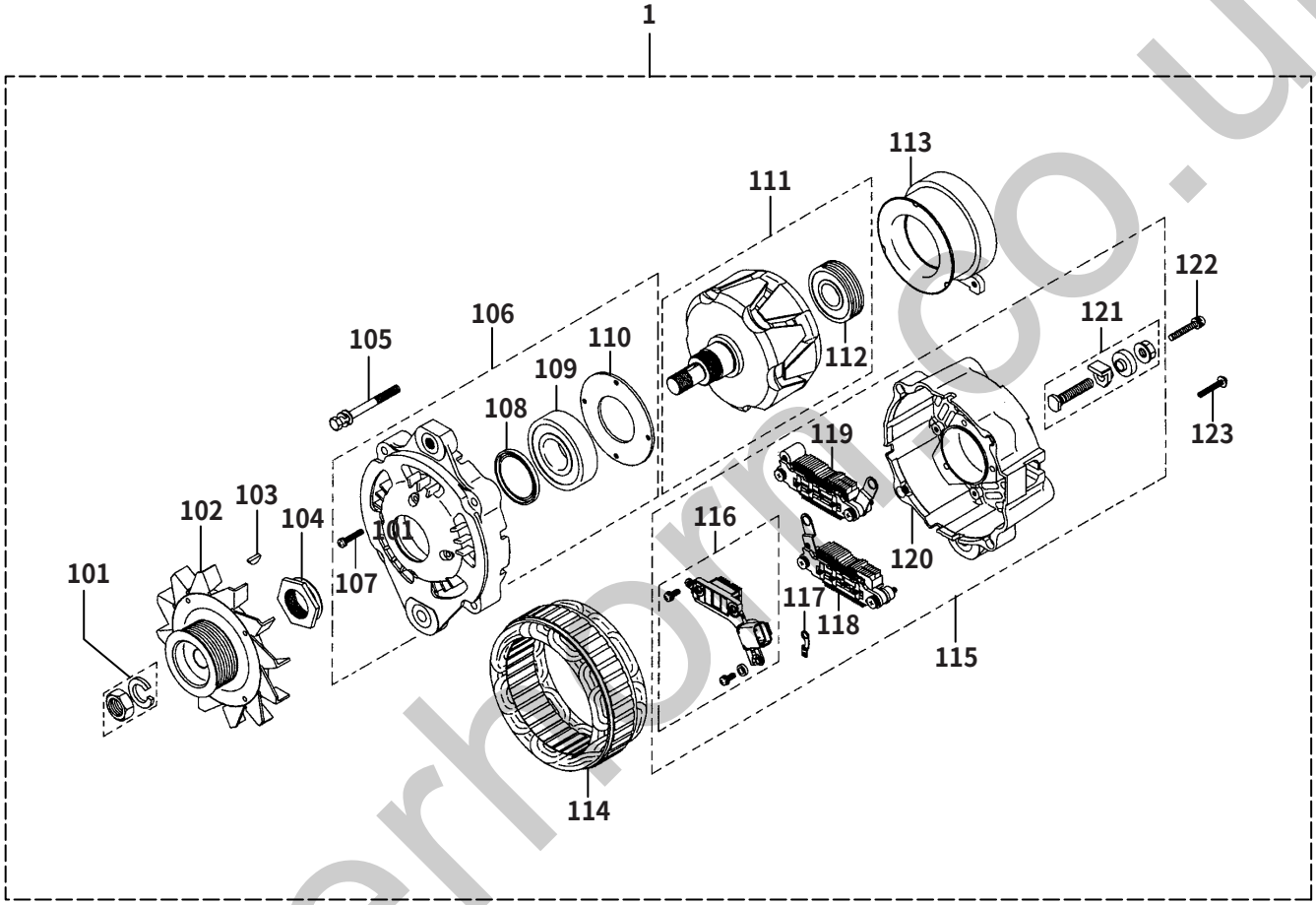

silverhorn.co.uk

68-02 ALTERNATOR (24V-80A)

REF. -NO.	PART NO.	R/P	SENQG	PART NAME & DESCRIPTION		MODEL & QTY Y1TAA1			APPLICABLE SERIAL NO. FROM@-	-@UPTO	M/R	VRD
1	H0434349100			ALTERNATOR	MEC	1						
101	HA529X06571			NUT SET		1						
102	*			PULLEY ASSY		1						
103	HS275S04160			KEY,WOODRUFF		1						
104	HA981S20221			NUT		1						
105	HA715X03471			BOLT SET		1						
106	HA640X51670			BRACKET ASSY,FRONT		1						
107	HA414X21671			SCREW SET		1						
108	HS806P42201			SEAL,OIL		1						
109	HS930P62870			BEARING		1						
110	HA834X07871			RETAINER		1						
111	HA880X92170			ROTOR ASSY		1						
112	HS930P90070			BEARING		1						
113	HA299X01270			COIL ASSY		1						
114	HA383X47570			STATOR		1						
115	HA642X57070			BRACKET ASSY,REAR		1						
116	HA866X38272			REGULATOR SET		1						
117	HA666X82270			PLATE		1						
118	HA860X44470			RECTIFIER ASSY		1						
119	HA860X44570			RECTIFIER ASSY		1						
120	HA643X19271			BRACKET,REAR		1						
121	HA450X22571			TERMINAL SET		1						
122	HA414X23171			SCREW SET		1						
123	HA414X23371			SCREW SET		1						

silverhorn.co.uk

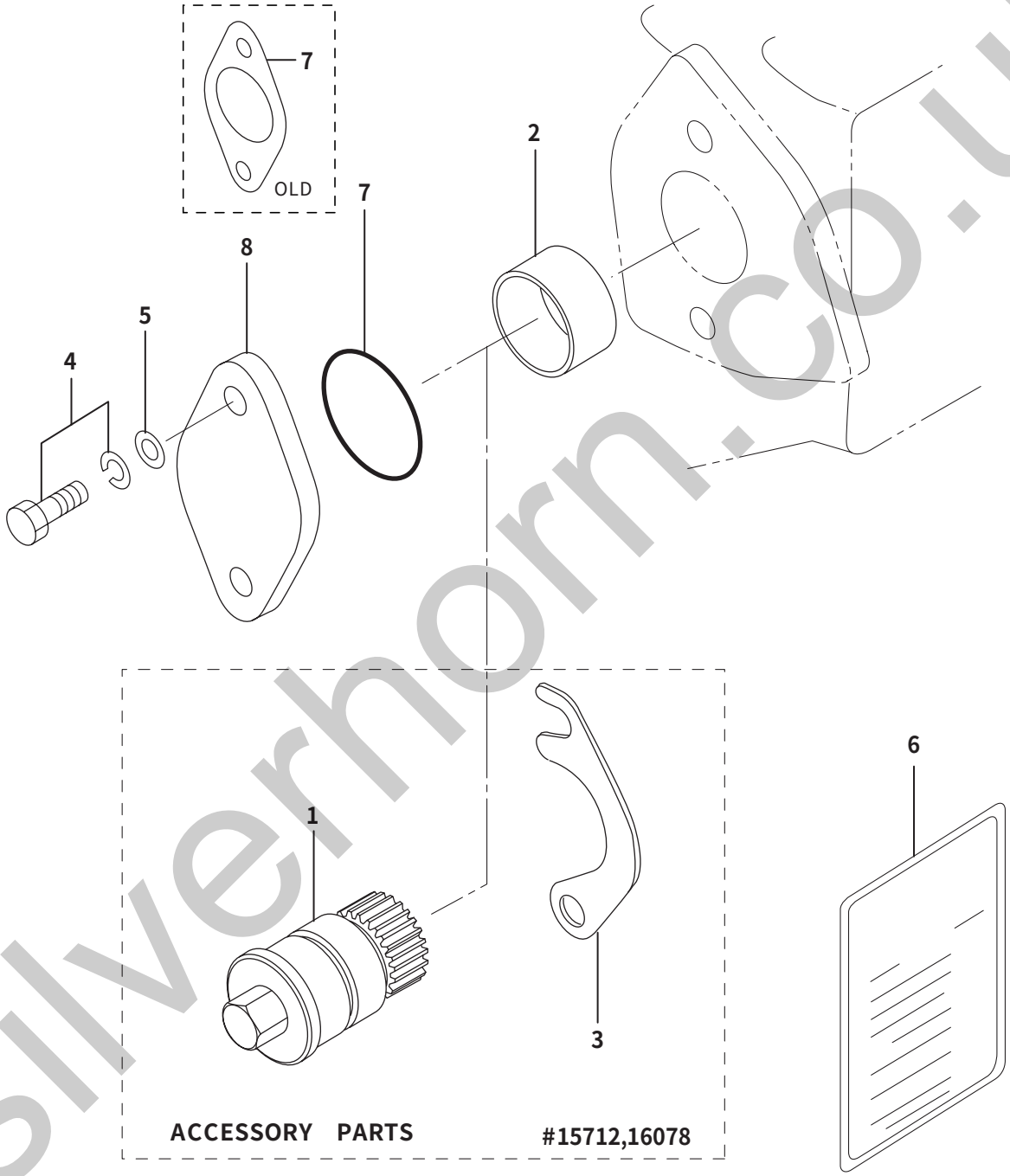

silverhorn.co.uk

71 TURNING GEAR

REF. -NO.	PART NO.	R/P	SENQG	PART NAME & DESCRIPTION		MODEL & QTY Y1TAA1			APPLICABLE SERIAL NO. FROM@-	-@UPTO	M/R	VRD
1	H3757110100		D	GEAR,TURNING	Z=11	1				-16360		
2	H0560505030			BUSHING		1						
3	H3757110300		D	FLANGE		1				-16360		
4	HF180512020			BOLT,W/WASHER	B/W	2					A	
5	HF250012000			WASHER,PLAIN		2					A	
6	H3757101500			PLATE,CAUTION		1						
7	H3344210200		C	PACKING		1				-16360	A	
	H3344220200	3	1C	PACKING		1				-16655		
	H0550720600	N	2	O-RING		1			16656-			V
8	H3354606900		C	COVER		1				-16655		
	H3757101600	G	1	COVER		1			16656-			V

silverhorn.co.uk

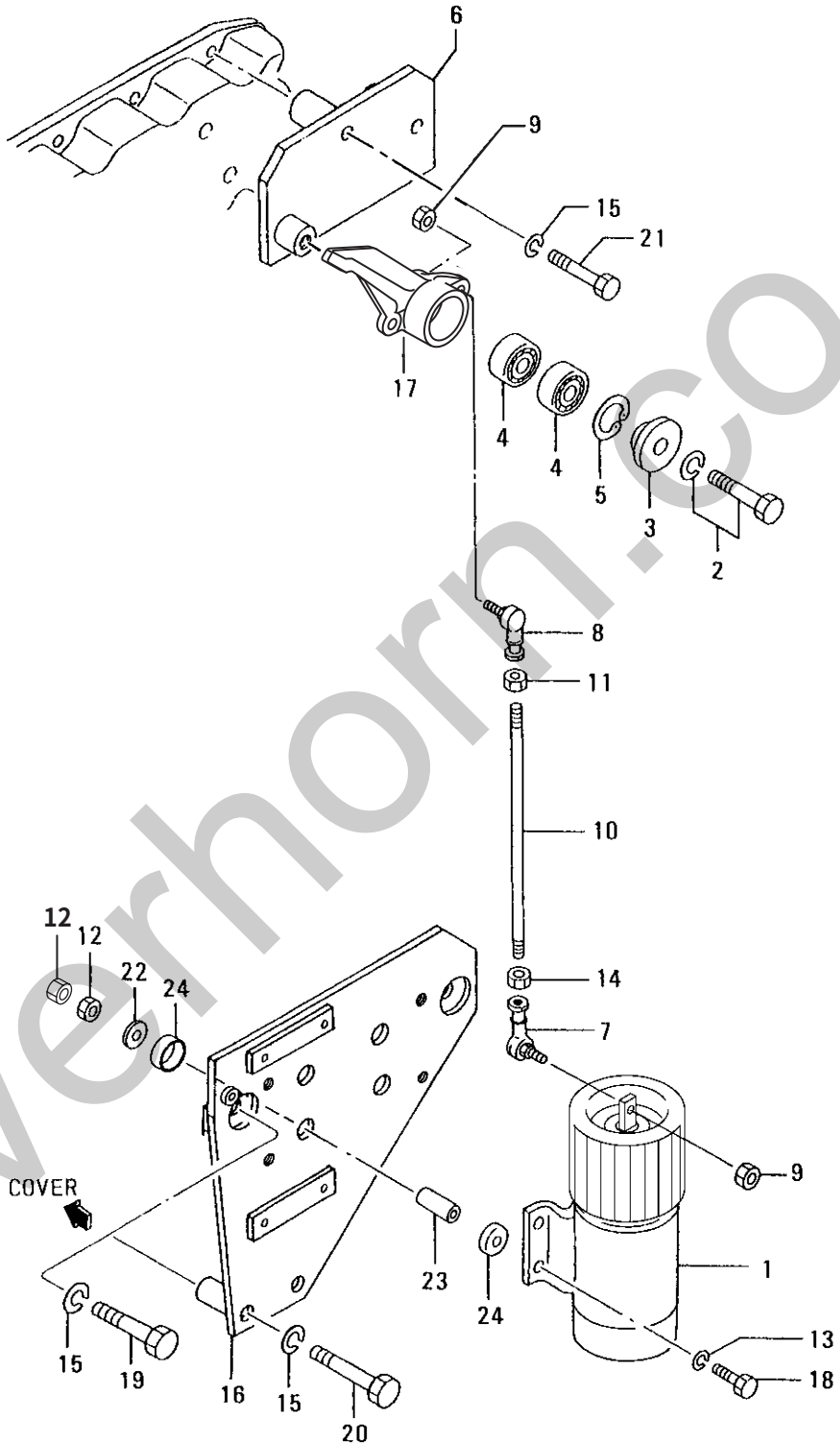

silverhorn.co.uk

REF. -NO.	PART NO.	R/P	SENQG	PART NAME & DESCRIPTION		MODEL & QTY Y1TAA1			APPLICABLE SERIAL NO. FROM@-	-@UPTO	M/R	VRD
1	H0440008500		C	SOLENOID,STOP		1				-16077		
	H0440008800	N1		SOLENOID,STOP		1			16078-			
2	HF180510040			BOLT,W/WASHER	B/W	1					A	
3	H3256118300			PLATE,END		1						
4	*		C	BEARING,BALL		2					A	
	H3756300800	11		BEARING,BALL		2						
5	HF320203000			RING,SNAP		1					A	
6	H3758704202			BRACKET,LEVER		1						
7	H35A6158300			JOINT,BALL		1						
8	H35A6158400			JOINT,BALL		1						
9	H0563400610			NUT,SELF LOCKING		2						
10	H0590206110			ROD		1						
11	H0941300600			NUT,LOCK		1					A	
12	HF230006000			NUT,LOCK		8					A	
13	HF251506000			WASHER,SPRING		4					A	
14	HF232006000			NUT,JAM		1					A	
15	HF251512000			WASHER,SPRING		6					A	
16	H4750036601			BRACKET		1						
17	H4750033700		C	LEVER,STOP		1				-16077		
	H3758704403	31		LEVER,STOP		1						V
18	HF103506035		C	BOLT		4				-16360	A	
	HF103506040	N1		BOLT		4			16361-			V
19	HF103512045			BOLT		2					A	
20	HF103512070			BOLT		2					A	
21	HF103512080			BOLT		2					A	
22	H0830206000			WASHER		4					A	
23	H4750036700			SPACER		4						
24	H4750034100			CUSHION,RUBBER		8						

silverhorn.co.uk

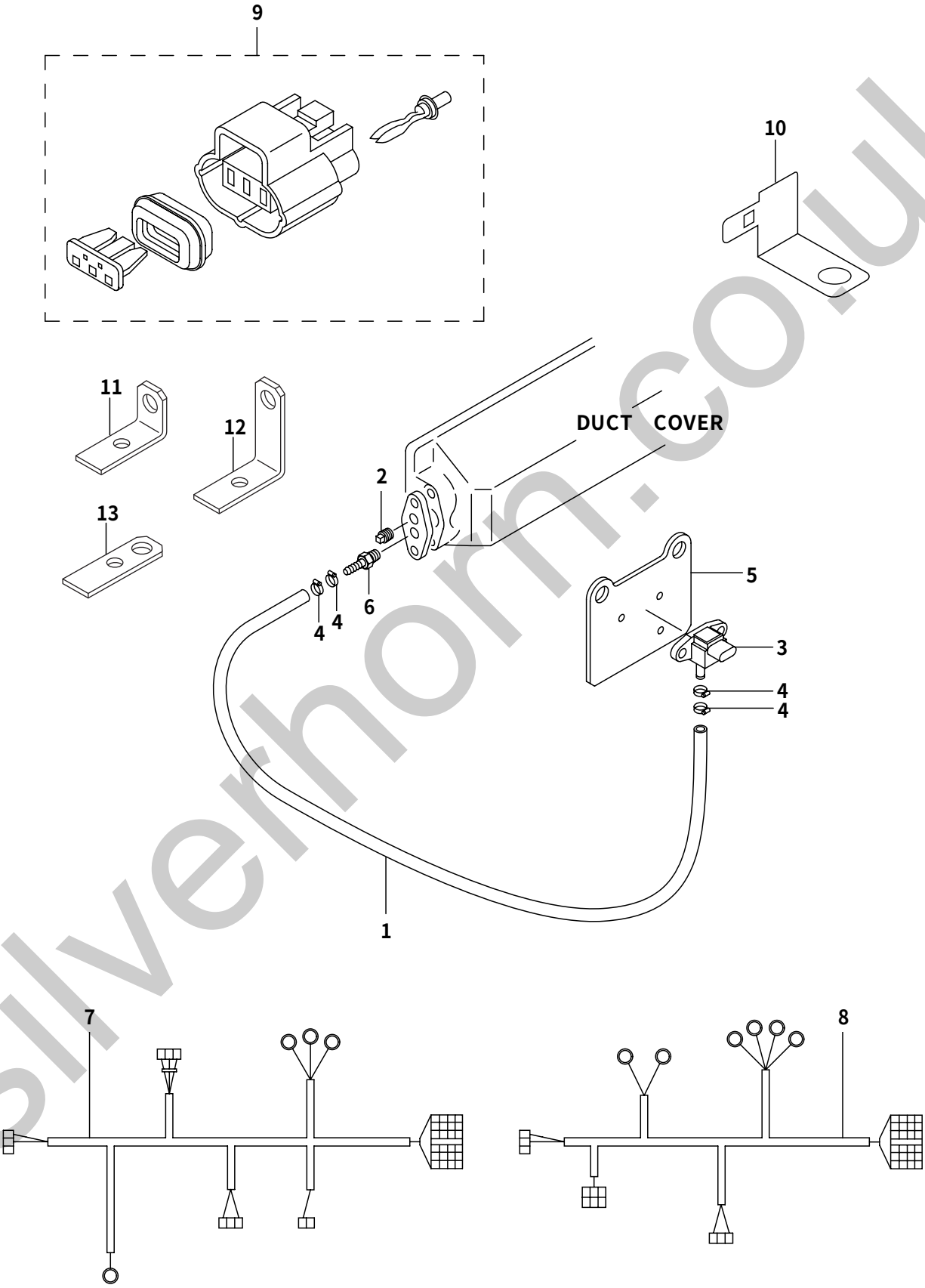

silverhorn.co.uk

REF. -NO.	PART NO.	R/P	SENQG	PART NAME & DESCRIPTION	MODEL & QTY Y1TAA1			APPLICABLE SERIAL NO. FROM@-	-@UPTO	M/R	VRD
1	HF401006100		C	HOSE,RUBBER	1				-16874		
	H3759201600	31		HOSE,RUBBER	1						
2	HF500610000			PLUG,TAPERED	1					A	
3	HMC885208			SENSOR,BOOST	1						
4	H0531750161			CLAMP	4						
5	H3759200500			PLATE,BOOST	1						
6	H4730206300			NIPPLE	1						
7	H3759000200		C	HARNESS	1				-16360		
	H3759010200	31		HARNESS	1						V
8	H3759000300		C	HARNESS	1				-16360		
	H3759010300	31		HARNESS	1						V
9	H3759210100			CONNECTOR	1						
10	H3789200600		A	STAY,CONNECTOR	5			16548-			V
11	H3759013100		A	STAY	14			16397-			V
12	H3759013200		A	STAY	7			16397-			V
13	H3759013400		A	STAY	9			16397-			V

silverhorn.co.uk

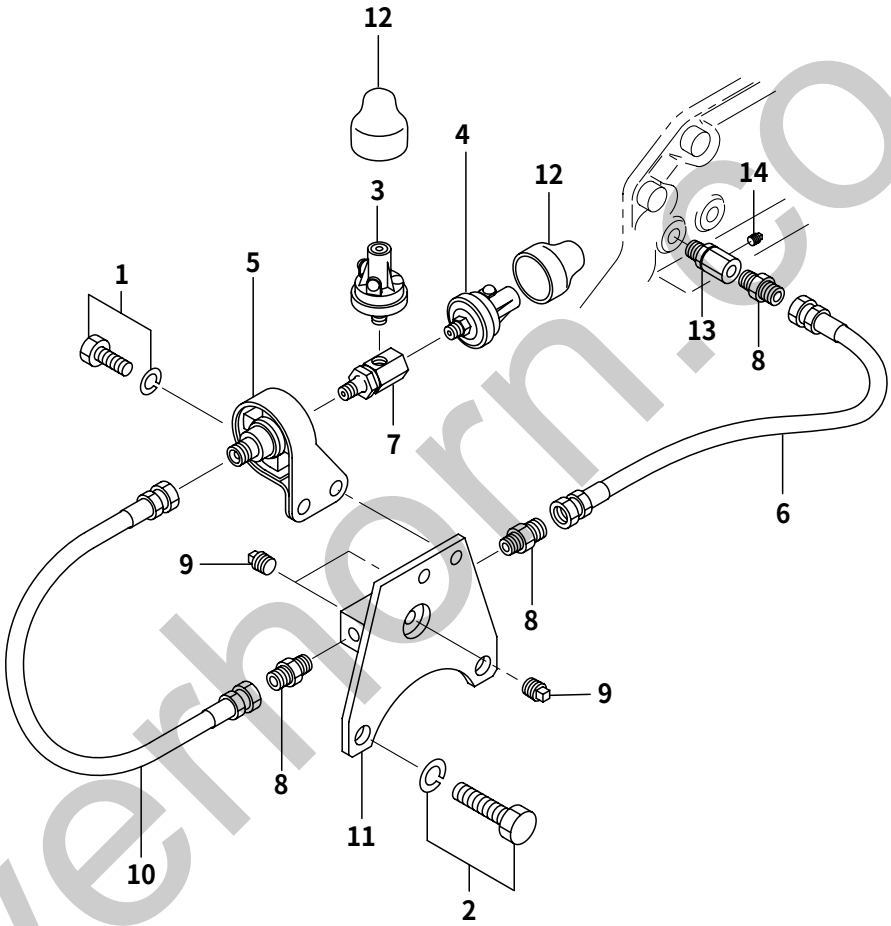

silverhorn.co.uk

90-02 ALARM SWITCH

REF. -NO.	PART NO.	R/P	SENQG	PART NAME & DESCRIPTION		MODEL & QTY Y1TAA1			APPLICABLE SERIAL NO. FROM@-	-@UPTO	M/R	VRD
1	HF180510020			BOLT,W/WASHER	B/W	2					A	
2	HF180512050			BOLT,W/WASHER	B/W	2					A	
3	*		C	SWITCH,PRESSURE		1						
	H0444245400	11		SWITCH,PRESSURE	0.15MPa	1						V
4	*		C	SWITCH,PRESSUR		1						
	H0444245700	11		SWITCH,PRESSURE	0.3MPa	1						V
5	*		C	MOUNT,OIL PRESSURE		1						
	H3123655100	11		MOUNT,OIL PRESSURE		1						
6	H4595104030			PIPE,FLEXIBLE		1						
7	H4568950401			CONNECTOR		1						
8	HF454006300			CONNECTOR		3					A	
9	HF500610000			PLUG,TAPERED		3					A	
10	H4595104024			PIPE,FLEXIBLE		1						
11	H4750256701			BRACKET,UNIT		1						
12	H0439000800		A	BOOT,RUBBER		2			16548-			V
13	H4568950401		A	CONNECTOR		1			16361-			V
14	HF500610000		A	PLUG,TAPERED		1			16361-			V

silverhorn.co.uk

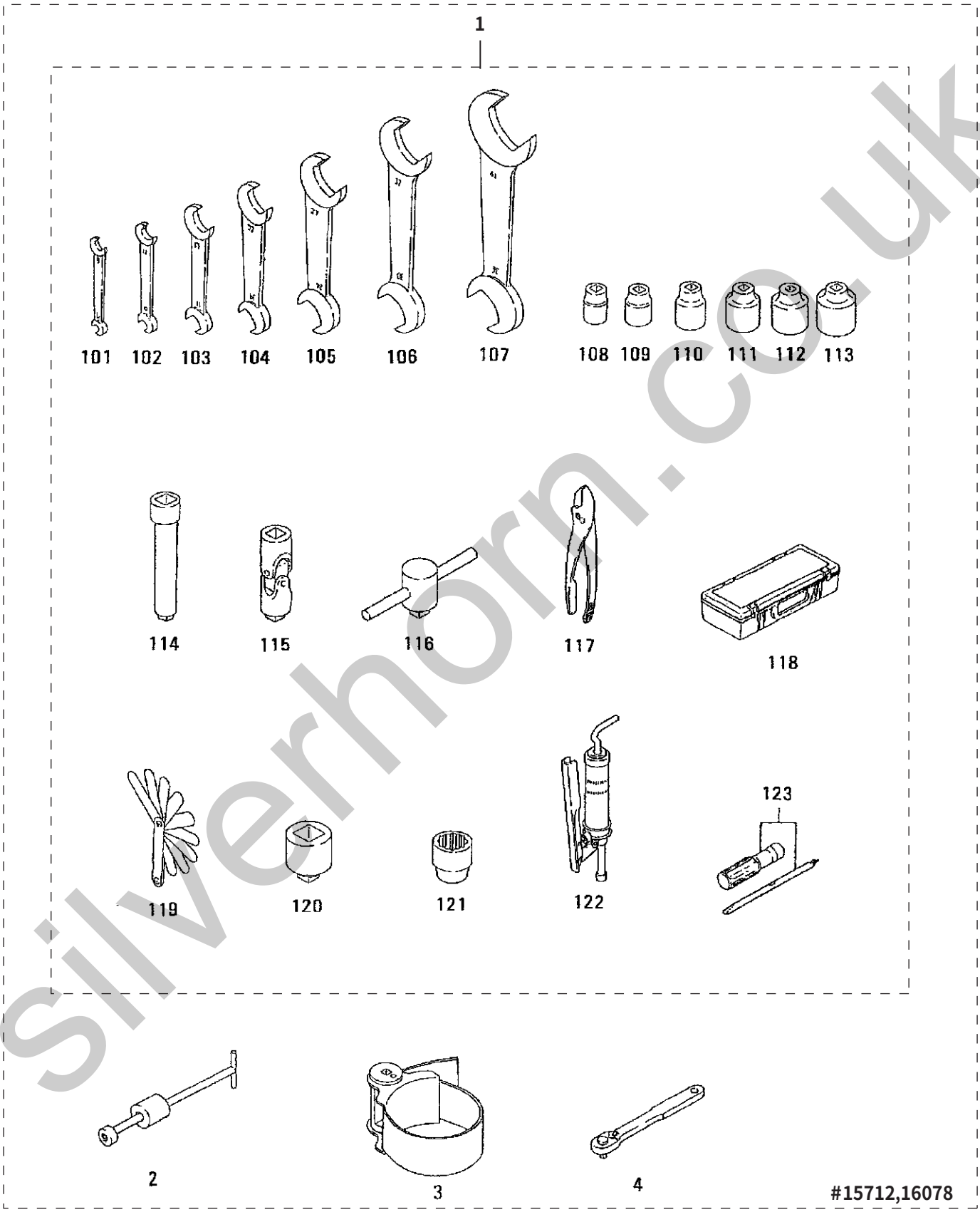

silverhorn.co.uk

REF. -NO.	PART NO.	R/P	SENQG	PART NAME & DESCRIPTION		MODEL & QTY Y1TAA1			APPLICABLE SERIAL NO. FROM@-	-@UPTO	M/R	VRD
1	H3259100012		D	TOOL ASSY		1				-15712		
101	HF960007008		D	SPANNER,OPENEND	7X8	1				-15712		
102	HF960010012		D	SPANNER,OPENEND	10X12	1				-15712		
103	HF960014017		D	SPANNER,OPENEND	14X17	1				-15712		
104	HF960019022		D	SPANNER,OPENEND	19X22	1				-15712		
105	HF960024027		D	SPANNER,OPENEND	24X27	1				-15712		
106	HF960030032		D	SPANNER,OPENEND	30X32	1				-15712		
107	HF960036041		D	SPANNER,OPENEND	36X41	1				-15712		
108	HF961417000		D	SOCKET	FOR 12MM BOLT	1				-15712		
109	HF961422000		D	SOCKET	FOR 14MM BOLT	1				-15712		
110	HF961424000		D	SOCKET	FOR 16MM BOLT	1				-15712		
111	HF961427000		D	SOCKET	FOR 18MM BOLT	1				-15712		
112	HF961430000		D	SOCKET	FOR 20MM BOLT	1				-15712		
113	HF961432000		D	SOCKET	FOR 22MM BOLT	1				-15712		
114	HF961525000		D	BAR,EXTENSION		1				-15712		
115	HF961710000		D	JOINT,UNIVERSAL		1				-15712		
116	HF961830000		D	HANDLE,SLIDE		1				-15712		
117	HF963015000		D	PLIERS,SLOTTED		1				-15712		
118	HMC420083		D	BOX,TOOL		1				-15712		
119	H3009106501		D	GAGE,THICKNESS		1				-15712		
120	H3349103600		D	ADAPTER		1				-15712		
121	H3349113500		D	SOCKET		1				-15712		
122	H6430915300		D	PUMP,GREASE		1				-15712		
123	H9126700201		D	DRIVER,SCREW		1				-15712		
2	H3359110101		D	REMOVER		1				-15712		
3	H3259122100		D	WRENCH,FILTER		1				-15712		
4	H3719103300		D	HANDLE	FOR TURNING	1				-15712		

silverhorn.co.uk

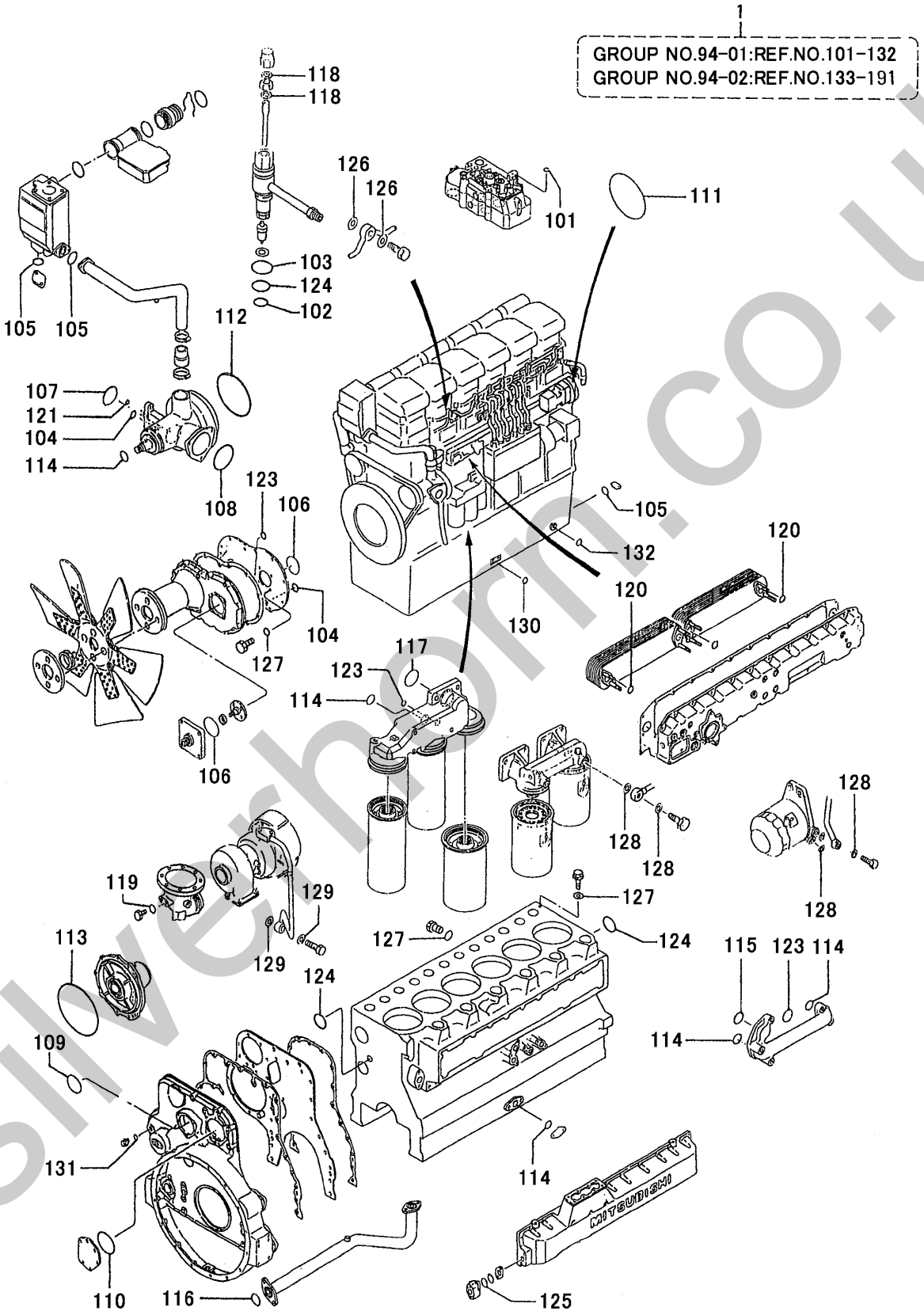

silverhorn.co.uk

94-01 OVERHAUL GASKET KIT(PART-1)

REF. -NO.	PART NO.	R/P	SENQG	PART NAME & DESCRIPTION		MODEL & QTY Y1TAA1			APPLICABLE SERIAL NO. FROM@-	-@UPTO	M/R	VRD
1	H3759423230		C	GASKET KIT,OVERHAUL	EO-00	1				-16360		
	H3759423240	3	1C	GASKET KIT,OVERHAUL	EO-01	1				-16361		
	H3759433210	3	2C	GASKET KIT,OVERHAUL	EO-02	1				-16381		
	H3759433220	3	3C	GASKET KIT,OVERHAUL	EO-03	1				-16397	A	
	H3759433230	3	4C	GASKET KIT,OVERHAUL	EO-04	1				-16863		
	H3759433240	3	5C	GASKET KIT,OVERHAUL	EO-05	1				-17212		
	H3759433250	3	6	GASKET KIT,OVERHAUL	EO-06	1						
1	01 H0550710200			O-RING		6					A	
1	02 HF315002600			O-RING	EO-00	6					A	
	H0550710260			O-RING	E0-01,02,03,04,05,06	6						
1	03 H0550710420			O-RING		7					A	
1	04 H0550720250			O-RING		2					A	
1	05 HF315306000			O-RING		3					A	
1	06 H0550720900			O-RING		3					A	
1	07 HF315309500			O-RING		1					A	
1	08 HF315310000			O-RING		1					A	
1	09 H0550721100			O-RING		2					A	
1	10 H0550721250			O-RING		1					A	
1	11 H0550721450			O-RING		1					A	
1	12 HF315317000			O-RING		1					A	
1	13 HF315325000			O-RING		1					A	
1	14 H0550720400			O-RING		10					A	
1	15 H0550720450			O-RING		2					A	
1	16 H0550720500			O-RING		1					A	
1	17 H0550720750			O-RING		1					A	
1	18 HF420214000			GASKET		12					A	
1	19 HF420227000			GASKET		2					A	
1	20 H0550710140			O-RING		11					A	
1	21 H0550710150			O-RING		1					A	
1	22 H0550700160			O-RING	NOT SHOWN	3					A	
1	23 H0550710180			O-RING		3					A	
1	24 H0550710340			O-RING		8					A	
1	25 H0550710460			O-RING		4					A	
1	26 H0594601001			WASHER,SEALING		13					A	
1	27 H0594601201			WASHER,SEALING		16					A	
1	28 H0594601401			WASHER,SEALING		21					A	
1	29 H0594601601			WASHER,SEALING		4					A	
1	30 H0594602001			WASHER,SEALING		2					A	
1	31 H0594602401			WASHER,SEALING		1					A	
1	32 H0594603601			WASHER,SEALING		2					A	

silverhorn.co.uk

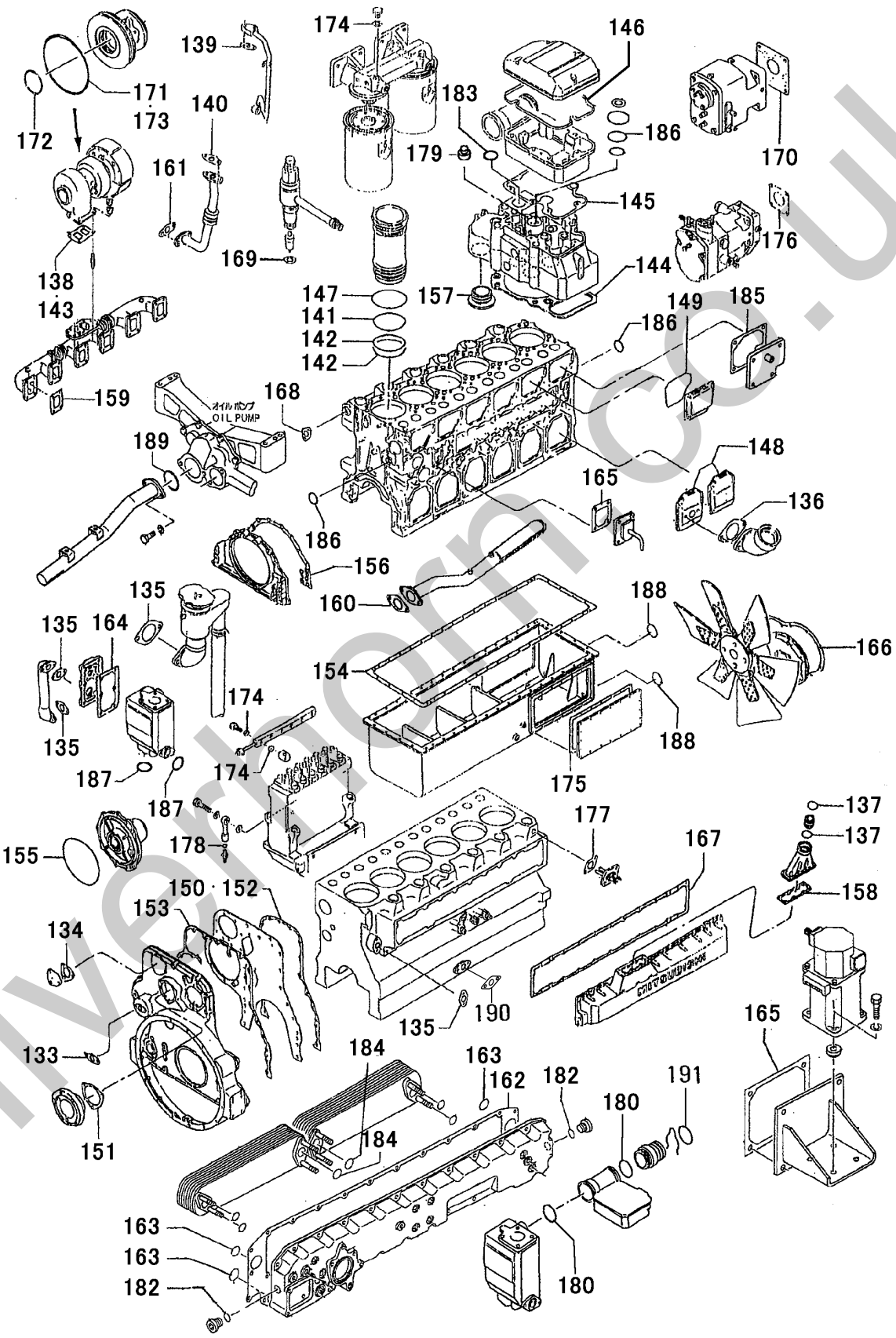

silverthorn.co.uk

94-02 OVERHAUL GASKET KIT(PART-2)

REF. -NO.	PART NO.	R/P	SENQG	PART NAME & DESCRIPTION		MODEL & QTY Y1TAA1			APPLICABLE SERIAL NO. FROM@-	-@UPTO	M/R	VRD
133	H3062550501			GASKET	EO-00,01,02,03,04,05	1					A	
	H3062550502			GASKET	EO-06	1						
134	H3252513200			PACKING	EO-00	1					A	
	H3252523200			PACKING	EO-01,02,03,04,05,06	1						
135	H3254636800			PACKING	EO-00,01,02	7					A	
	H3254646800			PACKING	EO-03,04,05,06	4						
136	H3344210200			PACKING	EO-00,01	1					A	
	H3344220200			PACKING	EO-02,03,04,05,06	1						
137	H35A3000100			O-RING		2					A	
138	H35A3230100			GASKET,TURBOCHARGER		1					A	
139	H3623600700			PACKING	EO-00,01	1					A	
	H3623610700			PACKING	EO-02,03,04,05,06	1						
140	H3623600800			PACKING	EO-00,01	1					A	
	H3623610800			PACKING	EO-02,03,04,05,06	1						
141	H3710704200			O-RING,LINER		6					A	
142	H3710704300			O-RING,LINER		12					A	
143	H3723209100			GASKET,TURBOCHARGER		1					A	
144	H3750102201			GASKET,CYLINDER HEAD		6					A	
145	H3750421200			PACKING,ROCKER CASE	EO-00,01,02,03,04	6					A	
	H3750431200			PACKING,ROCKER CASE	EO-05,06	6						
146	H3750456200			O-RING,ROCKER CASE		6					A	
147	H3750732400			O-RING		6					A	
148	H3750737300			O-RING		6					A	
149	H3750737600			O-RING		6					A	
150	H3751120200			PACKING		1					A	
151	H3751103200			PACKING	EO-00,01,02	1					A	
	H3751113200			PACKING	EO-03,04,05,06	1						
152	H3751125200			PACKING		1					A	
153	H3751120400			PACKING		1					A	
154	H3751300200			PACKING,OIL PAN	EO-00,01,02	1					A	
	H3751310200			PACKING,OIL PAN	EO-03,04,05,06	1						
155	H3752503600			O-RING		1					A	
156	H3752520200			PACKING	EO-00,01,02,03	1					A	
	H3752530200			PACKING	EO-04,05,06	1						
157	H3753000200			PACKING		6					A	
158	H3753001200			PACKING	EO-00,01,02	1					A	
	H3753011200			PACKING	EO-03,04,05	1						
	H3753011201			PACKING	EO-06	1						
159	H3753210500			GASKET,EXHAUST		6					A	
160	H3753601100			PACKING	EO-00,01,02	1					A	
	H3753611100			PACKING	EO-03,04,05,06	1						
161	H3753602700			PACKING	EO-00,01,02	1					A	
	H3753612700			PACKING	EO-03,04,05,06	1						
162	H3753900200			PACKING	EO-00,01,02	1					A	
	H3753910200			PACKING	EO-03,04,05,06	1						
163	H3753900400			O-RING		3					A	
164	H3754613300			PACKING	EO-00,01,02	1					A	
	H3754623300			PACKING	EO-03,04,05,06	1						
165	H3754609800			PACKING,HEATER	EO-00,01,02	1					A	
	H3754619800			PACKING,HEATER	EO-03,04,05,06	1						

silverhorn.co.uk

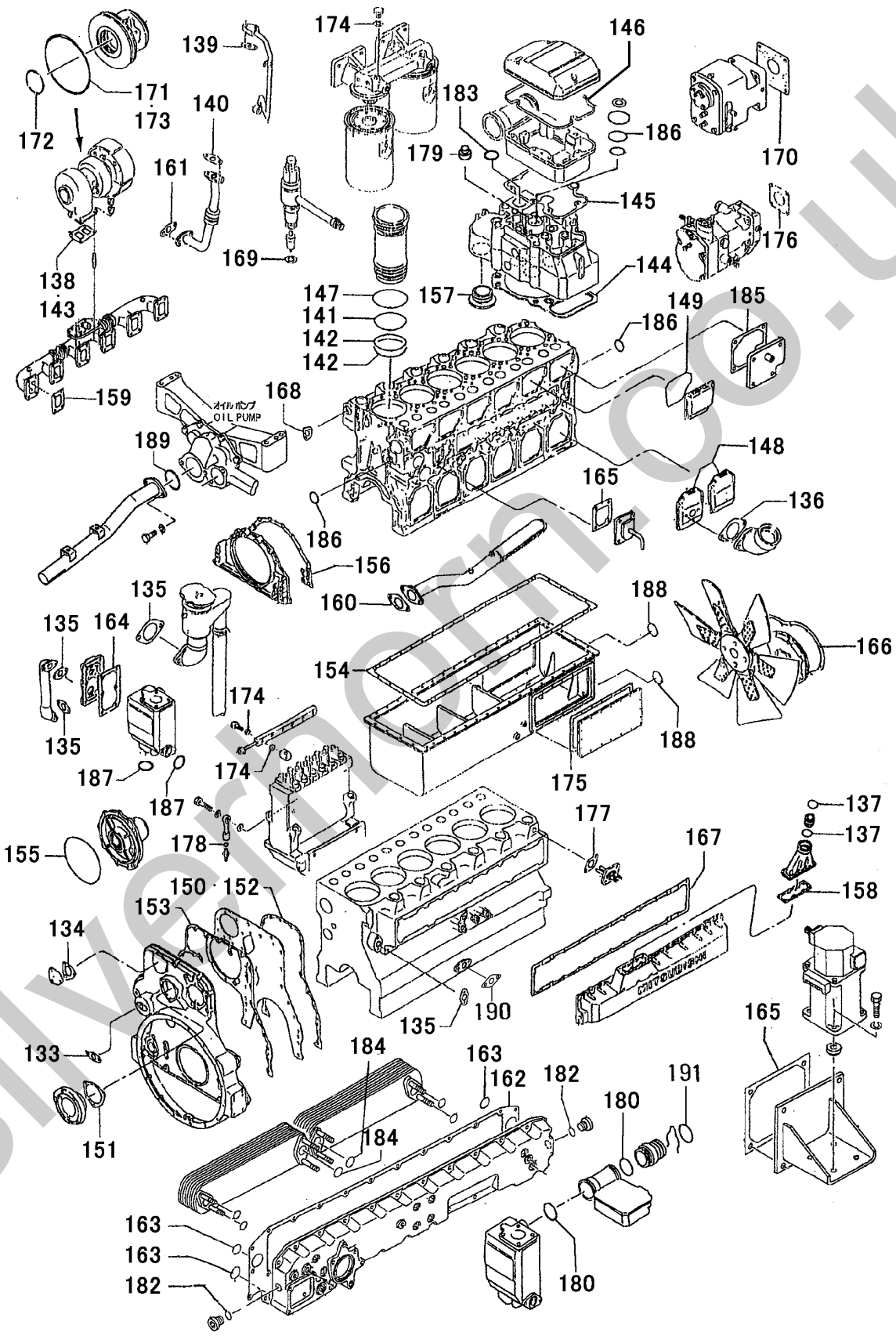

silvermorn.co.uk

94-02 OVERHAUL GASKET KIT(PART-2)

REF. -NO.	PART NO.	R/P	SENQG	PART NAME & DESCRIPTION		MODEL & QTY Y1TAA1			APPLICABLE SERIAL NO. FROM@-	-@UPTO	M/R	VRD
166	H3754820200			PACKING		1					A	
167	H3755508500			GASKET	EO-00,01	1					A	
	H3755518500			GASKET	EO-02,03,04,05,06	1						
168	H3755500600			GASKET	EO-00,01,02	2					A	
	H3755510600			GASKET	EO-03,04,05,06	2						
169	H3756116800			GASKET,NOZZLE		6					A	
170	H4106302200			GASKET		1					A	
171	H4916251100			O-RING		1					A	
172	H4918122600			O-RING,INSERT		1					A	
173	H4918122700			O-RING		1					A	
174	H0594600801			WASHER,SEALING		15					A	
175	H3721300700			PACKING	EO-00,01	2					A	
	H3721310700			PACKING	EO-02,03,04,05,06	2						
176	H3746321900			PACKING		1					A	
177	H3753000500			PACKING	EO-00,01,02	6					A	
	H3753010500			PACKING	EO-03,04,05,06	6						
178	H0550710100			O-RING		2					A	
179	H3350410300			SEAL,VALVE STEM		24					A	
180	H3754600500			O-RING		12					A	
181	H3759401300			BOND,1211	NOT SHOWN	1					A	
182	HMH035093			O-RING		14					A	
183	HF315304000			O-RING		6					A	
184	HMH035626			O-RING		4					A	
185	H4750033100			PACKING		2					A	
186	HF315003400			O-RING	EO-00	6					A	
	H0550710340			O-RING	EO-01,02,03,04,05,06	6						
187	HF315306000			O-RING		1					A	
188	H0550720600			O-RING		2					A	
189	H0550720650			O-RING		1					A	
190	H35B3602900			GASKET,OIL	EO-03,04,05,06	3					A	
191	H0550557060			O-RING	EO-05,06	1					A	

silverhorn.co.uk

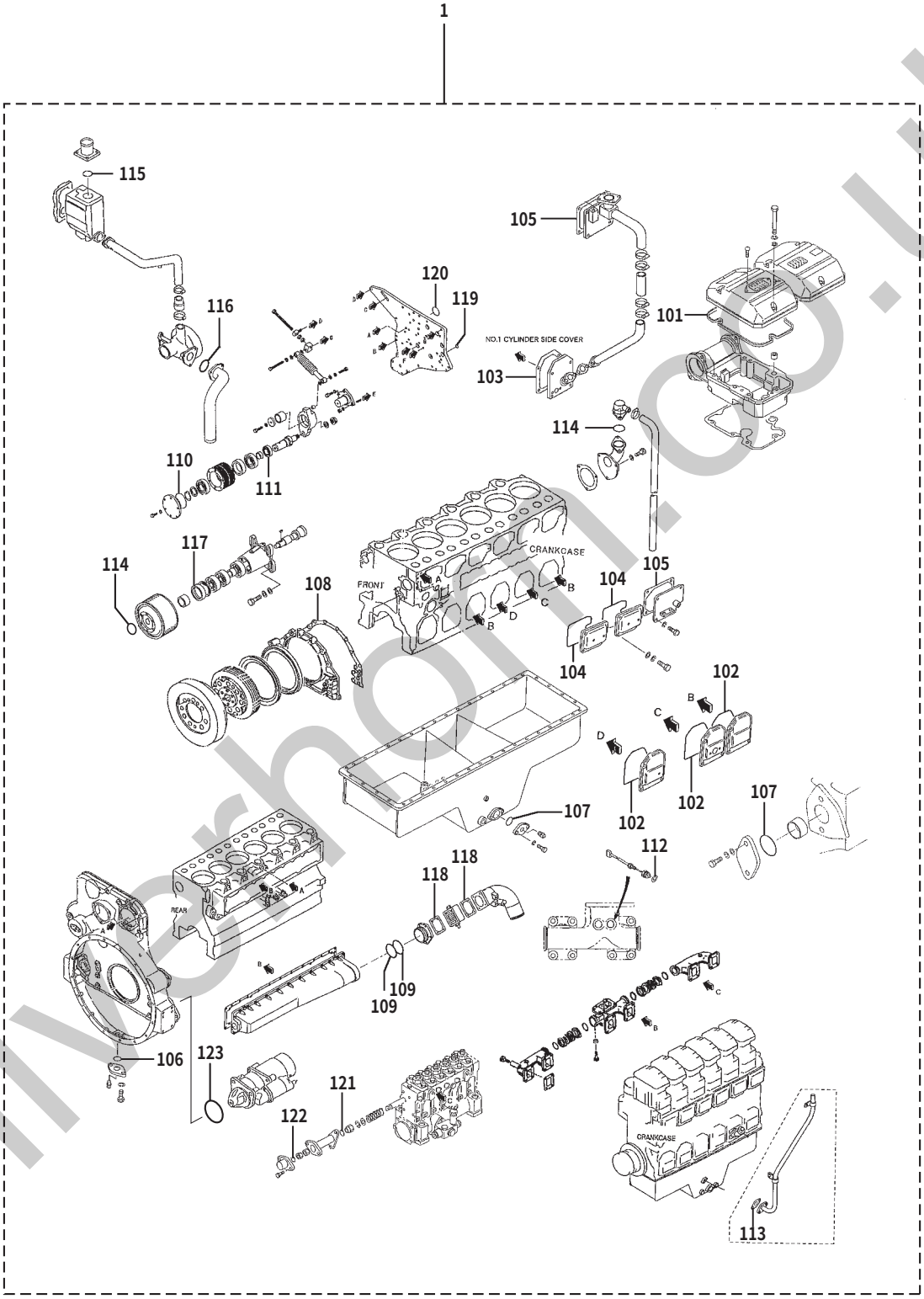

silverhorn.co.uk

94-03 OVERHAUL GASKET KIT(PART-3)

REF. -NO.	PART NO.	R/P	SENQG	PART NAME & DESCRIPTION	MODEL & QTY Y1TAA1			APPLICABLE SERIAL NO. FROM@-	-@UPTO	M/R	VRD
1	H3759400400			GASKET KIT,OVERHAUL	1						
101	H3750411900			O-RING,ROCKER COVER	6						
102	H3750706400			O-RING,SIDE COVER	5						
103	H3770717200			PACKING,SIDE COVER	1						
104	H3750706500			O-RING,CAM ROOM	2						
105	H4750033100			PACKING	2						
106	H0550710480			O-RING	1						
107	H0550720600			O-RING	2						
108	H3752530200			PACKING,FR.COVER	1						
109	H0550721150			O-RING	2						
110	H0550721150			O-RING	1						
111	H3264808300			SEAL,OIL	1						
112	H4123203900			GASKET	2						
113	H3303620600			GASKET	1						
114	H0550720550			O-RING	2						
115	HF315307500			O-RING	1						
116	HF315310000			O-RING	1						
117	H3622507500			SEAL,OIL	1						
118	H4263109600			PACKING	2						
119	H0550710180			O-RING	1						
120	H0550720650			O-RING	1						
121	H0550710360			O-RING	1						
122	H0550710390			O-RING	1						
123	HF315009500			O-RING	2						

silverhorn.co.uk

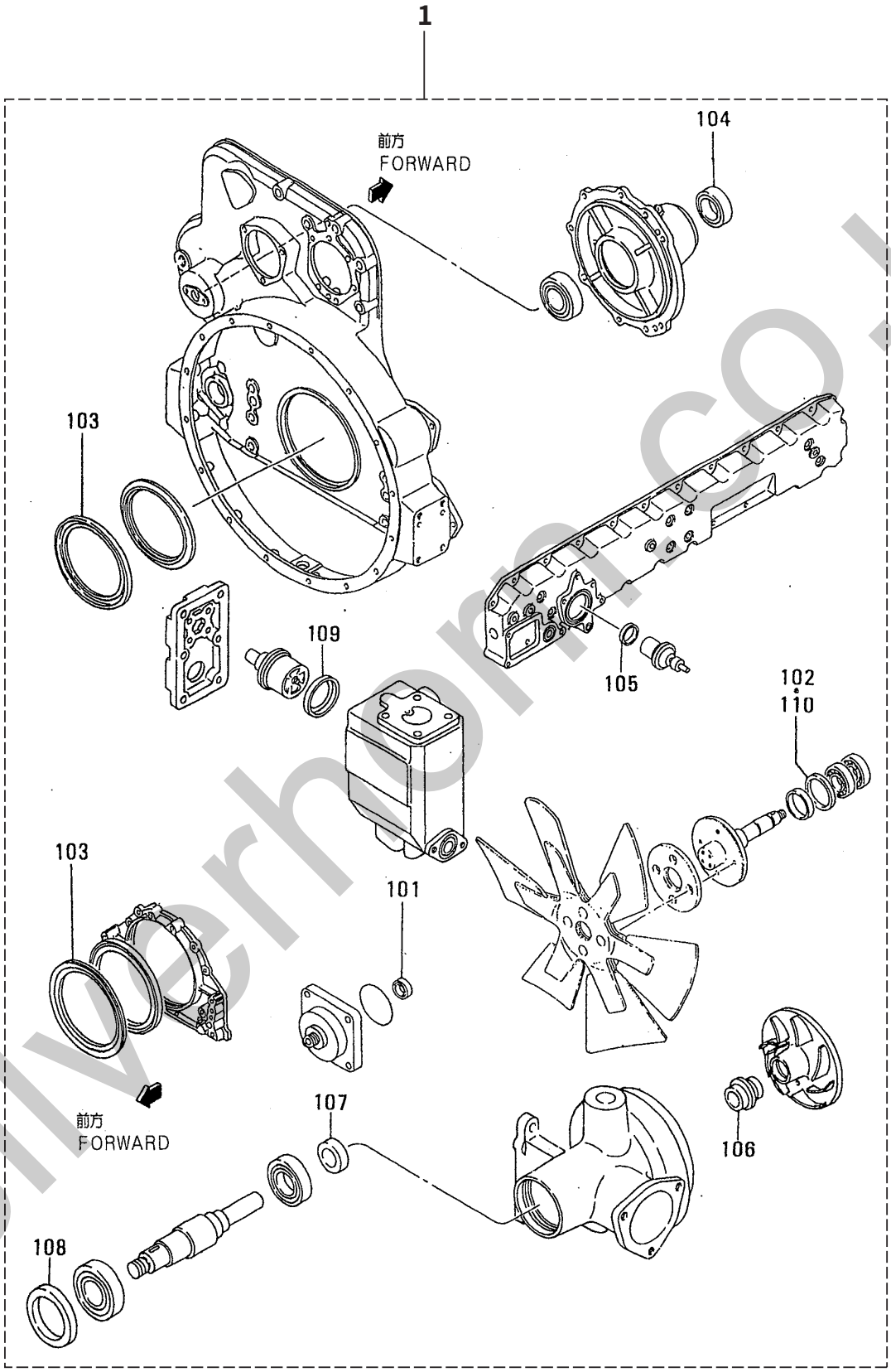

silverhorn.co.uk

94-04 OIL SEAL KIT

REF. -NO.	PART NO.	R/P	SENQG	PART NAME & DESCRIPTION		MODEL & QTY Y1TAA1			APPLICABLE SERIAL NO. FROM@-	-@UPTO	M/R	VRD
1	H3759432110		C	SEAL KIT,OIL	EO-00	1				-16360	A	
	H3759432120	3	1C	SEAL KIT,OIL	EO-01	1				-16397	A	
	H3759432130	3	2	SEAL KIT,OIL	EO-02	1					A	
101	HF300301831			SEAL,OIL		2					A	
102	H0486509001		D	SEAL,OIL	EO-00	1				-16360	A	
103	H3751104300			SEAL,OIL		2					A	
104	H3752503400			SEAL,OIL		1					A	
105	H3753900600			SEAL,THERMOSTAT		1					A	
106	H3754510600			SEAL,OIL	EO-00,01	1					A	
	H3754520600			SEAL,OIL	EO-02	1						
107	H3754501300			SEAL,OIL		1					A	
108	H3754501400			SEAL,OIL		1					A	
109	H3754601800			SEAL,THERMOSTAT		2						
110	H3754800900			SEAL,OIL		1					A	

silverhorn.co.uk

NUMERICAL PARTS INDEX

PART NO.	GRP NO.	PAGE	REF -NO.		PART NO.	GRP NO.	PAGE	REF -NO.		PART NO.	GRP NO.	PAGE	REF -NO.	
HA299X01270	68-02	97	1	13	HF103512035	63	89	7		HF103512110	40	49	2	
HA383X47570	68-02	97	1	14	HF103512035	63	89	25		HF103512110	46-03	63	46	
HA414X21671	68-02	97	1	07	HF103512035	07-02	11	12		HF103512110	61-01	69	6	
HA414X23171	68-02	97	1	22	HF103512035	46-03	61	19		HF103512120	36-03	45	37	
HA414X23371	68-02	97	1	23	HF103512035	46-03	63	48		HF103514025	36-03	45	14	
HA450X22571	68-02	97	1	21	HF103512035	46-03	65	65		HF103514030	61-01	69	12	
HA529X06571	68-02	97	1	01	HF103512035	46-03	65	65		HF103514030	61-01	69	33	
HA640X51670	68-02	97	1	06	HF103512035	61-01	69	3		HF103514085	61-04	77	1	65
HA642X57070	68-02	97	1	15	HF103512035	68-01	95	6		HF103516040	14	19	6	
HA643X19271	68-02	97	1	20	HF103512040	63	91	56		HF103516040	07-02	11	10	
HA666X82270	68-02	97	1	17	HF103512040	46-03	61	19		HF103516050	46-03	63	40	
HA715X03471	68-02	97	1	05	HF103512040	46-03	63	54		HF103516055	46-03	63	40	
HA834X07871	68-02	97	1	10	HF103512040	46-03	65	65		HF103516080	11	15	8	
HA860X44470	68-02	97	1	18	HF103512040	68-01	95	5		HF103516085	11	15	7	
HA860X44570	68-02	97	1	19	HF103512045	40	49	3		HF103522080	20	23	9	
HA866X38272	68-02	97	1	16	HF103512045	42	51	12		HF103522150	20	23	5	
HA880X92170	68-02	97	1	11	HF103512045	87	101	19		HF111508030	63	89	22	
HA981S20221	68-02	97	1	04	HF103512045	25-01	27	5		HF111508030	63	89	22	
HF103506035	87	101	18		HF103512045	25-02	29	3		HF115510030	36-03	45	5	
HF103506040	87	101	18		HF103512045	61-06	83	15		HF115510055	36-03	45	4	
HF103508025	46-03	63	40		HF103512050	30	31	9		HF121010030	46-03	61	28	
HF103508035	61-01	69	21		HF103512050	30	31	9		HF145008025	25-02	29	19	
HF103508045	61-01	69	21		HF103512050	48	67	3		HF145008035	32	35	20	
HF103510020	61-01	69	32		HF103512050	63	91	60		HF180506012	61-04	77	1	64
HF103510030	36-01	41	14		HF103512055	46-03	61	12		HF180506020	61-04	77	1	68
HF103510030	46-02	59	11		HF103512055	46-03	63	48		HF180506030	61-02	71	25	
HF103510035	62-01	85	10		HF103512055	46-03	63	60		HF180506030	61-02	71	28	
HF103510045	61-06	83	14		HF103512060	30	33	46		HF180508020	63	89	38	
HF103510055	61-02	71	21		HF103512060	46-03	63	56		HF180508020	25-02	29	18	
HF103510070	61-02	71	29		HF103512065	46-03	63	60		HF180508025	61-04	77	1	66
HF103510080	36-01	41	7		HF103512070	87	101	20		HF180508025	61-04	77	1	67
HF103510080	61-02	71	20		HF103512070	36-02	43	9		HF180508030	61-01	69	27	
HF103510085	36-01	41	1		HF103512075	14	19	2		HF180508030	61-04	77	1	66
HF103510090	61-02	71	18		HF103512075	30	31	10		HF180508035	61-02	71	10	
HF103512025	46-03	63	42		HF103512075	61-01	69	17		HF180508065	63	89	11	
HF103512025	61-01	69	10		HF103512080	87	101	21		HF180510016	20	23	14	
HF103512030	11	15	11		HF103512085	04	5	14		HF180510016	63	91	59	
HF103512030	23	25	3		HF103512095	46-03	61	5		HF180510020	11	15	22	
HF103512030	07-02	11	24		HF103512100	35	39	2		HF180510020	23	25	6	
HF103512030	46-03	63	47		HF103512100	46-03	61	5		HF180510020	43	53	25	
HF103512035	48	67	1		HF103512100	46-03	63	46		HF180510020	36-03	45	12	

silverhorn.co.uk

NUMERICAL PARTS INDEX

PART NO.	GRP NO.	PAGE	REF -NO.		PART NO.	GRP NO.	PAGE	REF -NO.		PART NO.	GRP NO.	PAGE	REF -NO.	
HF180510020	36-03	45	36		HF180512035	11	15	23		HF230510000	04	5	9	
HF180510020	90-02	105	1		HF180512035	13	17	3		HF230512000	04	5	11	01
HF180510025	42	51	4		HF180512035	30	31	11		HF230512000	46-03	65	67	
HF180510025	43	53	17		HF180512035	30	33	49		HF230514000	61-06	83	19	
HF180510025	36-03	45	27		HF180512035	43	53	8		HF232006000	87	101	14	
HF180510025	46-01	57	4		HF180512035	25-01	27	3		HF232008000	63	89	28	
HF180510025	46-01	57	4		HF180512035	25-01	27	13		HF232012000	61-04	79	1	90
HF180510030	43	53	2		HF180512035	25-02	29	5		HF232014000	46-03	63	49	
HF180510030	46-01	57	14		HF180512035	68-01	95	8		HF232024000	45	55	1	14
HF180510030	46-02	59	7		HF180512040	30	31	33		HF232024000	46-03	61	23	
HF180510035	35	39	1	26	HF180512040	30	33	48		HF232024000	46-03	63	52	
HF180510035	62-01	85	15		HF180512040	25-01	27	4		HF232508000	61-01	69	39	
HF180510040	87	101	2		HF180512050	90-02	105	2		HF232524000	61-04	77	1	70
HF180510050	61-02	71	19		HF182508016	32	35	19		HF244508000	61-01	69	40	
HF180512020	42	51	10		HF182508016	61-01	69	16		HF244510000	61-01	69	38	
HF180512020	71	99	4		HF182510025	36-01	41	17		HF244512000	32	35	11	
HF180512020	36-03	45	23		HF182510025	62-01	85	3		HF250006000	61-04	77	1	69
HF180512025	11	15	23		HF182510035	30	31	12		HF250008000	32	35	24	
HF180512025	30	31	11		HF182510065	04	5	25		HF250010000	39	47	1	05
HF180512025	07-02	13	36		HF182512030	39	47	8		HF250010000	36-01	41	15	
HF180512025	07-02	13	40		HF182512030	43	53	13		HF250010000	61-01	69	30	
HF180512025	07-02	13	46		HF182512030	07-02	11	17		HF250010000	62-01	85	16	
HF180512025	36-01	41	5		HF182512030	07-02	11	22		HF250012000	30	31	25	
HF180512025	36-03	45	7		HF182512035	39	47	4		HF250012000	30	31	28	
HF180512025	46-02	59	3		HF182512035	39	47	4		HF250012000	30	31	28	
HF180512025	46-02	59	19		HF200510040	36-03	45	21		HF250012000	30	31	31	
HF180512025	61-06	83	12		HF230006000	87	101	12		HF250012000	40	49	6	
HF180512025	62-01	85	2		HF230008000	32	35	22		HF250012000	71	99	5	
HF180512030	13	17	2		HF230008000	63	89	15		HF250012000	36-03	45	24	
HF180512030	30	31	26		HF230008000	61-01	69	40		HF250012000	46-03	61	7	
HF180512030	30	31	27		HF230008000	61-02	71	12		HF250012000	68-01	95	11	
HF180512030	30	31	27		HF230010000	39	47	1	03	HF250014000	32	35	6	
HF180512030	45	55	5		HF230010000	43	53	3		HF251506000	87	101	13	
HF180512030	05	7	6		HF230010000	36-01	41	19		HF251508000	32	35	23	
HF180512030	36-01	41	9		HF230010000	61-02	71	30		HF251508000	63	89	32	
HF180512030	36-02	43	11		HF230010000	62-01	85	11		HF251508000	63	91	57	
HF180512030	46-01	57	15		HF230012000	42	51	11		HF251508000	25-02	29	20	
HF180512030	46-02	59	6		HF230012000	46-03	61	8		HF251508000	46-03	63	41	
HF180512030	46-02	59	12		HF230014000	46-03	61	11		HF251508000	61-01	69	28	
HF180512030	46-02	59	21		HF230016000	11	15	9		HF251508000	61-02	71	11	
HF180512030	68-01	95	7		HF230508000	25-02	29	21		HF251510000	39	47	1	04

silverhorn.co.uk

NUMERICAL PARTS INDEX

PART NO.	GRP NO.	PAGE	REF -NO.	PART NO.	GRP NO.	PAGE	REF -NO.	PART NO.	GRP NO.	PAGE	REF -NO.
HF251510000	63	89	18	HF251512000	61-06	83	16	HF315310000	94-03	115	1 16
HF251510000	36-01	41	2	HF251512000	68-01	95	10	HF315311500	30	31	14
HF251510000	36-01	41	8	HF251514000	36-03	45	15	HF315317000	45	55	1 03
HF251510000	36-01	41	16	HF251514000	46-03	61	10	HF315317000	94-01	109	1 12
HF251510000	36-03	45	6	HF251514000	61-01	69	13	HF315325000	94-01	109	1 13
HF251510000	46-02	59	13	HF251514000	61-01	69	35	HF315603500	61-04	77	1 76
HF251510000	61-01	69	31	HF251514000	61-04	77	1 71	HF315604000	45	55	1 18
HF251510000	61-01	69	34	HF251516000	07-02	11	11	HF315608000	61-04	77	1 77
HF251510000	61-02	71	22	HF251516000	46-03	63	41	HF320203000	87	101	5
HF251510000	62-01	85	12	HF284140040	35	39	1 24	HF320203200	63	89	34
HF251512000	11	15	12	HF284605000	20	23	2 01	HF320204500	46-03	65	72
HF251512000	23	25	4	HF284606000	04	5	31	HF320207000	17	21	4
HF251512000	30	31	13	HF284606000	07-02	11	27 05	HF320209000	45	55	1 17
HF251512000	30	31	13	HF284612000	05	7	2	HF320210000	25-02	29	12
HF251512000	35	39	3	HF284612000	07-01	9	22	HF320211000	48	67	6
HF251512000	40	49	5	HF284614000	11	15	2	HF400205100	45	55	8
HF251512000	42	51	14	HF284614000	07-01	9	19	HF400212120	07-02	11	32
HF251512000	48	67	20	HF284614000	25-01	27	7	HF401006100	90-01	103	1
HF251512000	63	89	8	HF284620000	20	23	3	HF411010000	61-06	83	6
HF251512000	63	91	42	HF284620000	07-01	9	14	HF420214000	94-01	109	1 18
HF251512000	87	101	15	HF287007022	48	67	5	HF420227000	32	35	29
HF251512000	04	5	15	HF287007025	25-02	29	7	HF420227000	94-01	109	1 19
HF251512000	07-02	11	13	HF287007025	61-04	77	1 73	HF430000800	45	55	7
HF251512000	07-02	11	25	HF287010032	25-02	29	8	HF454006300	40	49	10
HF251512000	25-01	27	6	HF300301831	94-04	117	1 01	HF454006300	07-02	13	42
HF251512000	25-02	29	4	HF315002600	94-01	109	1 02	HF454006300	36-03	45	28
HF251512000	36-02	43	10	HF315003400	94-02	113	1 86	HF454006300	90-02	105	8
HF251512000	36-03	45	38	HF315009500	68-01	95	13	HF454008000	39	47	7
HF251512000	46-03	61	6	HF315009500	94-03	115	1 23	HF454008000	63	89	1
HF251512000	46-03	61	13	HF315304000	04	5	16	HF454010000	61-06	83	11
HF251512000	46-03	61	20	HF315304000	94-02	113	1 83	HF454012000	42	51	15
HF251512000	46-03	61	31	HF315306000	46-01	57	17	HF461012000	36-03	45	17
HF251512000	46-03	63	55	HF315306000	46-02	59	22	HF461014000	36-03	45	19
HF251512000	46-03	63	55	HF315306000	94-01	109	1 05	HF461014000	36-03	45	29
HF251512000	46-03	63	57	HF315306000	94-02	113	1 87	HF461014000	61-04	77	1 43
HF251512000	46-03	63	57	HF315307500	46-02	59	14	HF461014000	62-01	85	8
HF251512000	46-03	65	68	HF315307500	94-03	115	1 15	HF461016000	36-03	45	1
HF251512000	61-01	69	5	HF315309500	45	55	2	HF500012000	07-01	9	6
HF251512000	61-01	69	8	HF315309500	94-01	109	1 07	HF500012000	61-04	77	1 80
HF251512000	61-01	69	11	HF315310000	46-02	59	15	HF500016000	13	17	4
HF251512000	61-01	69	18	HF315310000	94-01	109	1 08	HF500020000	13	17	5

silverhorn.co.uk

NUMERICAL PARTS INDEX

PART NO.	GRP NO.	PAGE	REF -NO.		PART NO.	GRP NO.	PAGE	REF -NO.		PART NO.	GRP NO.	PAGE	REF -NO.	
HF500024000	11	15	17		HF961430000	91	107	1	12	H0434349100	68-02	97	1	
HF500036000	13	17	6		HF961432000	91	107	1	13	H0438217400	30	31	34	
HF500510001	07-02	13	41		HF961525000	91	107	1	14	H0438217400	30	31	34	
HF500521001	46-01	57	21		HF961710000	91	107	1	15	H0439000800	90-02	105	12	
HF500526001	43	53	15		HF961830000	91	107	1	16	H0440008500	87	101	1	
HF500610000	39	47	1	11	HF963015000	91	107	1	17	H0440008800	87	101	1	
HF500610000	46-01	57	23		HMC420083	91	107	1	18	H0441043400	11	15	19	
HF500610000	90-01	103	2		HMC885208	90-01	103	3		H0441044200	11	15	19	
HF500610000	90-02	105	9		HME064526	39	47	1	08	H0444245400	90-02	105	3	
HF500610000	90-02	105	14		HMF472087	35	39	1	24	H0444245700	90-02	105	4	
HF500613000	39	47	1	10	HMH000854	04	5	21		H0471003420	66	93	1	15
HF500613000	63	89	4		HMH004069	35	39	1	25	H0482621000	04	5	19	01
HF500613000	07-01	9	27		HMH020258	61-02	71	26		H0482621000	61-04	75	1	25
HF500617000	11	15	25		HMH020259	61-02	71	27		H0482622000	07-01	9	26	
HF500617000	61-06	83	9		HMH020293	61-02	71	23		H0482622500	01	3	2	01
HF500626000	13	17	7		HMH020294	61-02	71	24		H0482622500	07-01	9	9	
HF500626000	32	35	28		HMH035092	39	47	1	07	H0482622800	01	3	2	02
HF500633000	11	15	25		HMH035093	39	47	1	09	H0482624000	07-01	9	20	
HF501410000	07-02	11	27	03	HMH035093	94-02	113	1	82	H0482771000	01	3	2	03
HF800008000	61-04	79	1	94	HMH035626	39	47	1	06	H0482771000	07-01	9	23	
HF800130014	61-03	73	1	02	HMH035626	94-02	113	1	84	H0482771300	07-01	9	8	
HF800140014	61-03	73	1	03	HS275S04160	68-02	97	1	03	H0482771300	07-01	9	18	
HF800506408	48	67	7		HS806P42201	68-02	97	1	08	H0482771300	25-02	29	15	
HF800506409	46-03	63	37		HS930P62870	68-02	97	1	09	H0482772100	07-01	9	5	
HF800606210	25-02	29	13		HS930P90070	68-02	97	1	12	H0483001210	30	33	39	
HF800806208	45	55	1	12	H0066502048	33	37	1	19	H0486509001	94-04	117	1	02
HF801006309	48	67	8		H0066502048	61-04	77	1	59	H0531702300	43	53	19	
HF801006309	25-02	29	11		H0066504048	04	5	26		H0531743000	43	53	18	
HF801206308	45	55	1	11	H0090014380	66	93	1	20	H0531743000	43	53	18	
HF814332207	61-04	77	1	81	H0231000231	66	93	1	01	H0531750161	90-01	103	4	
HF960007008	91	107	1	01	H0232000150	66	93	1	04	H0531750400	43	53	1	01
HF960010012	91	107	1	02	H0233101700	66	93	1	05	H0531750401	43	53	19	
HF960014017	91	107	1	03	H0235000440	66	93	1	11	H0531750701	43	53	5	
HF960019022	91	107	1	04	H0237110221	66	93	1	16	H0531750701	46-02	59	10	
HF960024027	91	107	1	05	H0239210230	66	93	1	25	H0531800300	61-06	83	26	
HF960030032	91	107	1	06	H0293414130	61-05	81	1	16	H0550557060	46-01	57	25	
HF960036041	91	107	1	07	H0297314570	61-05	81	1	15	H0550557060	94-02	113	1	91
HF961417000	91	107	1	08	H0424500120	61-04	75	1	30	H0550700080	61-04	77	1	75
HF961422000	91	107	1	09	H0424500120	61-05	81	1		H0550700160	94-01	109	1	22
HF961424000	91	107	1	10	H0432240010	68-01	95	12		H0550710050	61-04	79	1	92
HF961427000	91	107	1	11	H0434349100	68-01	95	1		H0550710080	61-04	77	1	75

silverform.co.uk

NUMERICAL PARTS INDEX

PART NO.	GRP NO.	PAGE	REF-NO.		PART NO.	GRP NO.	PAGE	REF-NO.		PART NO.	GRP NO.	PAGE	REF-NO.	
H0550710100	94-02	113	1	78	H0550720550	43	53	20		H0594601201	61-04	77	1	62
H0550710140	61-01	69	2		H0550720550	48	67	9		H0594601201	94-01	109	1	27
H0550710140	94-01	109	1	20	H0550720550	94-03	115	1	14	H0594601401	36-03	45	20	
H0550710150	45	55	3		H0550720600	13	17	8		H0594601401	36-03	45	30	
H0550710150	94-01	109	1	21	H0550720600	43	53	9		H0594601401	61-03	73	1	05
H0550710180	40	49	8		H0550720600	71	99	7		H0594601401	61-04	77	1	63
H0550710180	36-02	43	7		H0550720600	94-02	113	1	88	H0594601401	61-06	83	10	
H0550710180	46-03	63	50		H0550720600	94-03	115	1	07	H0594601401	62-01	85	9	
H0550710180	94-01	109	1	23	H0550720650	36-01	41	3		H0594601401	94-01	109	1	28
H0550710180	94-03	115	1	19	H0550720650	46-03	63	53		H0594601601	13	17	9	
H0550710200	04	5	17		H0550720650	94-02	113	1	89	H0594601601	36-03	45	2	
H0550710200	94-01	109	1	01	H0550720650	94-03	115	1	20	H0594601601	46-01	57	20	
H0550710260	61-06	83	23		H0550720750	40	49	9		H0594601601	94-01	109	1	29
H0550710260	94-01	109	1	02	H0550720750	94-01	109	1	17	H0594602001	13	17	10	
H0550710340	07-01	9	17		H0550720800	61-04	77	1	77	H0594602001	94-01	109	1	30
H0550710340	07-01	9	25		H0550720900	25-01	27	11		H0594602401	11	15	18	
H0550710340	61-06	83	22		H0550720900	94-01	109	1	06	H0594602401	94-01	109	1	31
H0550710340	94-01	109	1	24	H0550721100	94-01	109	1	09	H0594603301	13	17	11	
H0550710340	94-02	113	1	86	H0550721150	30	31	14		H0594603601	13	17	12	
H0550710360	61-01	69	25		H0550721150	46-03	65	70		H0594603601	94-01	109	1	32
H0550710360	94-03	115	1	21	H0550721150	94-03	115	1	09	H0595004006	07-02	11	27	04
H0550710390	61-01	69	26		H0550721150	94-03	115	1	10	H0597812115	46-03	61	30	
H0550710390	94-03	115	1	22	H0550721250	11	15	21		H0597812135	46-03	61	29	
H0550710420	61-06	83	21		H0550721250	94-01	109	1	10	H0597812150	61-01	69	4	
H0550710420	94-01	109	1	03	H0550721450	63	89	6		H0597812240	30	31	15	
H0550710460	94-01	109	1	25	H0550721450	94-01	109	1	11	H0597812250	30	31	7	
H0550710480	11	15	24		H0560505030	71	99	2		H0597816125	11	15	6	
H0550710480	94-03	115	1	06	H0563400610	87	101	9		H0770712055	32	35	9	
H0550720250	45	55	4		H0563401220	32	35	11		H0805100200	63	89	12	
H0550720250	61-04	77	1	78	H0590206110	87	101	10		H0830206000	87	101	22	
H0550720250	94-01	109	1	04	H0590208135	63	89	29		H0941300600	87	101	11	
H0550720350	61-04	77	1	76	H0594600801	61-04	77	1	60	H0941300800	63	89	31	
H0550720400	40	49	7		H0594600801	62-02	87	1	01	H1045660067	66	93	1	08
H0550720400	07-02	13	39		H0594600801	94-02	113	1	74	H1045662007	66	93	1	03
H0550720400	36-02	43	12		H0594601001	61-03	73	1	04	H1045662047	66	93	1	02
H0550720400	94-01	109	1	14	H0594601001	61-04	77	1	61	H1231810020	66	93	1	09
H0550720450	36-01	41	10		H0594601001	61-06	83	4		H1233200190	66	93	1	14
H0550720450	36-02	43	8		H0594601001	94-01	109	1	26	H1236000080	66	93	1	12
H0550720450	94-01	109	1	15	H0594601201	07-01	9	7		H1236110080	66	93	1	13
H0550720500	36-01	41	11		H0594601201	07-01	9	13		H1237400050	66	93	1	19
H0550720500	94-01	109	1	16	H0594601201	36-03	45	18		H1239130040	66	93	1	18

silverhorn.co.uk

NUMERICAL PARTS INDEX

PART NO.	GRP NO.	PAGE	REF -NO.		PART NO.	GRP NO.	PAGE	REF -NO.		PART NO.	GRP NO.	PAGE	REF -NO.	
H1239140020	66	93	1	10	H3242303800	23	25	5		H3264808300	94-03	115	1	11
H1239210130	66	93	1	22	H3250400400	04	5	2		H3264808400	46-03	65	73	
H1239210140	66	93	1	23	H3250701400	46-03	61	22		H3264808500	46-03	63	39	
H1239410040	66	93	1	24	H3250701400	61-04	77	1	72	H3264808700	46-03	61	12	
H1259222800	66	93	1	21	H3251111300	11	15	20		H3264808800	46-03	61	5	
H1520021720	61-05	81	1	01	H3252102200	20	23	7	01	H3264808900	46-03	63	60	
H1521001120	61-05	81	1	02	H3252513200	94-02	111	1	34	H3264809100	46-03	63	46	
H1521040100	61-05	81	1	03	H3252523200	94-02	111	1	34	H3264811600	48	67	16	02
H1521050400	61-05	81	1	04	H3253201700	32	35	14		H3264816700	46-03	65	61	
H1521111920	61-05	81	1	05	H3253206455	32	35	9		H3264816900	46-03	65	62	
H1521120100	61-05	81	1	06	H3253207535	32	35	5		H3264818100	46-03	65	69	
H1521130700	61-05	81	1	07	H3253605500	07-02	13	33		H3264821100	48	67	14	
H1521140400	61-05	81	1	08	H3253609400	61-06	83	2		H32A2002900	46-03	61	23	
H1521150200	61-05	81	1	09	H3254201100	43	53	1	03	H3300702600	07-01	9	3	
H1521160200	61-05	81	1	10	H3254211300	43	53	10		H3303620600	42	51	9	
H1521170100	61-05	81	1	11	H3254220500	42	51	1		H3303620600	94-03	115	1	13
H1521210200	61-05	81	1	12	H3254512900	45	55	6		H3306311400	63	89	23	
H1522005620	61-05	81	1	13	H3254512901	45	55	6		H3306311400	63	89	33	
H1523004020	61-05	81	1	14	H3254636800	43	53	7		H3331101600	30	33	45	
H1523101300	61-05	81	1	17	H3254636800	07-02	13	37		H3331101600	48	67	4	
H3000424302	04	5	10		H3254636800	46-02	59	4		H3331101600	46-03	61	7	
H3000705500	07-02	11	31		H3254636800	94-02	111	1	35	H3331101600	46-03	63	45	
H3004208201	43	53	1	02	H3254646800	46-02	59	4		H3340703900	61-03	73	1	06
H3006822400	40	49	4		H3254646800	94-02	111	1	35	H3340706100	07-02	11	30	
H3009106501	91	107	1	19	H3254802900	48	67	11		H3344210200	71	99	7	
H3040705600	25-02	29	17		H3256109500	30	33	47		H3344210200	36-03	45	31	
H3044500800	45	55	1	20	H3256118300	87	101	3		H3344210200	94-02	111	1	36
H3062550501	25-02	29	16		H3256200115	62-02	87	1	02	H3344220200	42	51	3	
H3062550501	94-02	111	1	33	H3256200800	62-01	85	4		H3344220200	71	99	7	
H3062550502	94-02	111	1	33	H3256260300	62-02	87	1	03	H3344220200	36-03	45	31	
H3063651900	32	35	21		H3259100012	91	107	1		H3344220200	94-02	111	1	36
H3066852600	46-03	63	59		H3259122100	91	107	3		H3349103600	91	107	1	20
H3111912201	07-02	11	27	02	H3259300300	04	5	27		H3349113500	91	107	1	21
H3120171800	11	15	10		H3259824900	61-04	77	1	57	H3350113400	01	3	3	
H3120171800	14	19	7		H3260710700	07-01	9	24		H3350410300	04	5	5	
H3120171800	46-03	63	41		H3262500800	48	67	12		H3350410300	94-02	113	1	79
H3123655100	90-02	105	5		H3262500800	07-01	9	21		H3354606900	71	99	8	
H3126251901	61-01	69	20		H3264801400	48	67	13		H3354606900	07-02	13	34	
H3230702600	07-01	9	4		H3264806600	46-03	65	63		H3354606900	46-02	59	5	
H3233609500	36-03	45	22		H3264806801	46-03	65	64		H3356114500	61-06	83	20	
H3234815300	48	67	10		H3264808300	46-03	65	74		H3359110101	91	107	2	

silverhorn.co.uk

NUMERICAL PARTS INDEX

PART NO.	GRP NO.	PAGE	REF -NO.		PART NO.	GRP NO.	PAGE	REF -NO.		PART NO.	GRP NO.	PAGE	REF -NO.	
H3370711701	20	23	6		H3624300010	43	53	21		H3750411900	04	5	24	
H3370711701	20	23	10		H3624301300	43	53	22		H3750411900	94-03	115	1	01
H3370711701	01	3	8		H3624301300	43	53	22		H3750413100	04	5	6	
H3370711701	07-01	9	2	01	H3624301400	43	53	26		H3750413200	04	5	7	
H3446107700	63	89	20		H3624805500	46-03	61	24		H3750414600	04	5	22	
H34A3500900	45	55	1	19	H3664600090	46-01	57	11		H3750416100	04	5	23	
H34A3626100	61-06	83	3		H3710110600	01	3	2	04	H3750421200	04	5	13	
H34A4200500	42	51	2		H3710402800	04	5	11	02	H3750421200	94-02	111	1	45
H34A4802200	48	67	2		H3710413300	04	5	8		H3750422012	04	5	11	
H34A4802200	46-03	61	20		H3710704200	07-02	11	6		H3750426200	04	5	23	
H34A4802200	46-03	65	68		H3710704200	94-02	111	1	41	H3750430200	04	5	1	
H34A6304500	63	89	13		H3710704300	07-02	11	7		H3750431100	04	5	12	
H35A3000100	30	31	3		H3710704300	94-02	111	1	42	H3750431200	94-02	111	1	45
H35A3000100	30	31	3		H3711114200	11	15	14		H3750432500	04	5	11	04
H35A3000100	94-02	111	1	37	H3712303400	23	25	1	01	H3750441100	04	5	12	
H35A3006600	30	33	50		H3719103300	91	107	4		H3750444010	04	5	19	
H35A3230100	32	35	25		H3721300700	94-02	113	1	75	H3750456200	04	5	24	
H35A3230100	94-02	111	1	38	H3721310700	94-02	113	1	75	H3750456200	94-02	111	1	46
H35A3503200	35	39	1	21	H3723209100	94-02	111	1	43	H3750503300	05	7	8	
H35A3503300	35	39	1	22	H3726101700	62-01	85	13		H3750504200	05	7	1	
H35A3503400	35	39	1	23	H3726101800	62-01	85	14		H3750504201	05	7	1	
H35A3542100	35	39	1	20	H3742508201	25-01	27	9		H3750510800	05	7	5	
H35A6109900	63	89	20		H3743211300	32	35	8		H3750513200	05	7	8	
H35A6138600	63	89	27		H3746321900	94-02	113	1	76	H3750524200	05	7	1	
H35A6138600	63	91	47		H3750101501	01	3	5		H3750531100	05	7	7	
H35A6138700	63	89	30		H3750101501	04	5	18		H3750700020	07-01	9	1	
H35A6158300	87	101	7		H3750102201	01	3	6		H3750700021	07-01	9	1	
H35A6158400	87	101	8		H3750102201	94-02	111	1	44	H3750700701	07-01	9	16	
H35B3602900	43	53	7		H3750103101	01	3	2	05	H3750700800	07-02	11	8	
H35B3602900	07-02	13	37		H3750105050	01	3	1		H3750703100	07-01	9	10	
H35B3602900	94-02	113	1	90	H3750107500	01	3	2	07	H3750703200	07-01	9	11	
H3620708900	07-02	11	29		H3750107501	01	3	2	07	H3750703900	07-01	9	12	
H3621315800	42	51	9		H3750111400	01	3	4		H3750704041	07-02	11	27	
H3622507500	48	67	15		H3750112501	01	3	7		H3750704401	07-02	11	27	01
H3622507500	94-03	115	1	17	H3750117600	01	3	4		H3750704600	07-01	9	14	
H3623600700	94-02	111	1	39	H3750137011	01	3	1		H3750704600	07-01	9	15	
H3623600800	94-02	111	1	40	H3750137012	01	3	1		H3750706302	07-02	11	20	
H3623610700	36-03	45	9		H3750400300	04	5	3		H3750706400	07-02	11	16	
H3623610700	94-02	111	1	39	H3750402300	04	5	16		H3750706400	94-03	115	1	02
H3623610800	36-03	45	10		H3750404201	04	5	20		H3750706500	07-02	11	19	
H3623610800	94-02	111	1	40	H3750410400	04	5	4		H3750706500	94-03	115	1	04

silverhorn.co.uk

NUMERICAL PARTS INDEX

PART NO.	GRP NO.	PAGE	REF -NO.		PART NO.	GRP NO.	PAGE	REF -NO.		PART NO.	GRP NO.	PAGE	REF -NO.	
H3750706700	07-02	13	38		H3751104300	94-04	117	1	03	H3751950040	17	21	8	
H3750706900	07-02	11	15		H3751113200	43	53	24		H3751950050	17	21	9	
H3750708700	43	53	11		H3751113200	94-02	111	1	51	H3751950060	17	21	10	
H3750709400	20	23	13		H3751120200	11	15	3		H3751950070	17	21	11	
H3750712500	07-02	11	2		H3751120200	94-02	111	1	50	H3751950080	17	21	12	
H3750712510	07-02	11	3		H3751120400	11	15	5		H3752000500	20	23	4	
H3750712520	07-02	11	4		H3751120400	94-02	111	1	53	H3752003100	20	23	11	
H3750714040	07-02	11	27		H3751125200	94-02	111	1	52	H3752003101	20	23	11	
H3750714400	07-02	11	27	01	H3751150300	11	15	4		H3752020010	20	23	1	
H3750716900	07-02	11	15		H3751160100	11	15	1		H3752020011	20	23	1	
H3750717100	07-02	11	14		H3751160102	11	15	1		H3752100010	20	23	7	
H3750717200	07-02	11	26		H3751300200	94-02	111	1	54	H3752240400	20	23	8	
H3750718900	43	53	14		H3751310200	13	17	1		H3752240401	20	23	8	
H3750719100	07-02	13	44		H3751310200	94-02	111	1	54	H3752300100	20	23	2	03
H3750719200	07-02	11	9		H3751330800	13	17	15		H3752301102	23	25	7	
H3750722700	07-02	11	1		H3751340800	13	17	15		H3752311100	23	25	7	
H3750724040	07-02	11	27		H3751403100	14	19	1		H3752312101	23	25	8	
H3750727100	07-02	11	14		H3751421200	14	19	5		H3752313010	23	25	1	
H3750727200	07-02	11	26		H3751431100	14	19	4		H3752313500	23	25	2	
H3750727801	07-02	11	18		H3751710010	17	21	2		H3752313501	23	25	2	
H3750731601	07-01	9	2	04	H3751710400	17	21	1		H3752500600	25-02	29	9	
H3750732400	07-02	11	5		H3751718100	17	21	3		H3752503400	25-02	29	14	
H3750732400	94-02	111	1	47	H3751900600	17	21	5	02	H3752503400	94-04	117	1	04
H3750737300	07-02	11	16		H3751910600	17	21	5	02	H3752503600	25-02	29	2	
H3750737300	94-02	111	1	48	H3751913100	17	21	13		H3752503600	94-02	111	1	55
H3750737600	07-02	11	19		H3751913200	17	21	14		H3752504001	25-01	27	8	
H3750737600	94-02	111	1	49	H3751913300	17	21	15		H3752504201	25-02	29	6	
H3750737800	07-02	11	18		H3751913400	17	21	16		H3752504400	25-01	27	1	
H3750938100	07-02	13	47		H3751913500	17	21	17		H3752504401	25-01	27	1	
H3750938200	07-02	13	48		H3751920301	17	21	5	04	H3752505200	20	23	12	
H3750938300	07-02	13	49		H3751940010	17	21	5		H3752505201	20	23	12	
H3750938400	07-02	13	50		H3751940020	17	21	6		H3752505202	20	23	12	
H3750950010	07-02	13	51		H3751940030	17	21	7		H3752507500	25-01	27	12	
H3750950020	07-02	13	52		H3751940040	17	21	8		H3752507800	05	7	3	
H3750950030	07-02	13	53		H3751940050	17	21	9		H3752507900	14	19	3	
H3750950040	07-02	13	54		H3751940060	17	21	10		H3752507900	48	67	2	
H3750950050	07-02	13	55		H3751940070	17	21	11		H3752507900	04	5	15	
H3751103200	94-02	111	1	51	H3751940080	17	21	12		H3752507900	05	7	4	
H3751104000	11	15	13		H3751950010	17	21	5		H3752519400	05	7	4	
H3751104300	11	15	15		H3751950020	17	21	6		H3752520200	94-02	111	1	56
H3751104300	25-01	27	10		H3751950030	17	21	7		H3752529300	05	7	3	

silverthorn.co.uk

NUMERICAL PARTS INDEX

PART NO.	GRP NO.	PAGE	REF -NO.		PART NO.	GRP NO.	PAGE	REF -NO.		PART NO.	GRP NO.	PAGE	REF -NO.	
H3752530100	25-01	27	1		H3753207800	30	31	6		H3753634020	36-02	43	13	
H3752530200	25-01	27	2		H3753210500	32	35	4		H3753634200	36-02	43	4	
H3752530200	94-02	111	1	56	H3753210500	94-02	111	1	59	H3753634500	36-02	43	5	
H3752530200	94-03	115	1	08	H3753220600	32	35	12		H3753643300	36-03	45	16	
H3752543100	25-02	29	1		H3753227100	32	35	15		H3753653100	36-03	45	11	
H3753000200	30	31	1		H3753233500	32	35	17		H3753653101	36-03	45	11	
H3753000200	94-02	111	1	57	H3753240201	32	35	3		H3753658700	63	89	3	
H3753000300	30	31	35		H3753243400	32	35	16		H3753668700	63	89	3	
H3753000500	94-02	113	1	77	H3753243401	32	35	16		H3753701100	36-01	41	13	
H3753001200	94-02	111	1	58	H3753501100	35	39	4		H3753701300	36-01	41	18	
H3753003400	30	33	43		H3753550010	35	39	1		H3753702100	36-03	45	32	
H3753003500	30	33	44		H3753550300	35	39	1	02	H3753702200	36-03	45	33	
H3753004900	30	33	37		H3753550500	35	39	1	08	H3753702300	36-03	45	34	
H3753010400	30	33	38		H3753550500	35	39	1	14	H3753702400	36-03	45	35	
H3753010500	94-02	113	1	77	H3753550800	35	39	1	19	H3753710800	36-01	41	12	
H3753011200	94-02	111	1	58	H3753550900	35	39	1	09	H3753711200	36-01	41	4	
H3753011201	94-02	111	1	58	H3753551010	35	39	1	03	H3753900200	94-02	111	1	62
H3753011301	30	33	50		H3753552010	35	39	1	10	H3753900400	39	47	3	
H3753020500	30	31	8		H3753554010	35	39	1	16	H3753900400	94-02	111	1	63
H3753020500	30	31	36		H3753555010	35	39	1	06	H3753900600	39	47	6	
H3753020700	30	31	32		H3753557010	35	39	1	13	H3753900600	94-04	117	1	05
H3753020800	30	31	30		H3753559010	35	39	1	01	H3753901010	39	47	1	
H3753102300	30	31	18		H3753560010	35	39	1		H3753901300	39	47	1	02
H3753102600	30	31	21		H3753560500	35	39	1	08	H3753910100	39	47	1	01
H3753102700	30	31	22		H3753560500	35	39	1	14	H3753910200	39	47	2	
H3753102900	30	31	20		H3753565010	35	39	1	06	H3753910200	94-02	111	1	62
H3753105401	30	31	23		H3753567010	35	39	1	13	H3753910500	39	47	5	
H3753112200	30	31	24		H3753569010	35	39	1	01	H3753911010	39	47	1	
H3753112800	30	31	19		H3753601100	94-02	111	1	60	H3753911300	39	47	1	02
H3753113200	30	33	40		H3753602700	94-02	111	1	61	H3754001010	40	49	1	
H3753122100	30	31	4		H3753604800	36-02	43	1		H3754001300	40	49	11	
H3753122103	30	31	4		H3753604900	63	91	58		H3754002100	40	49	1	04
H3753122200	30	31	24		H3753610200	36-01	41	6		H3754010100	40	49	1	01
H3753122201	30	31	24		H3753611100	94-02	111	1	60	H3754204300	42	51	5	
H3753122500	30	31	5		H3753612100	36-03	45	25		H3754204400	42	51	6	
H3753142501	30	31	5		H3753612700	36-03	45	8		H3754204800	42	51	7	
H3753200900	32	35	7		H3753612700	94-02	111	1	61	H3754214400	42	51	6	
H3753202500	32	35	1		H3753614400	36-02	43	2		H3754224700	42	51	8	
H3753204400	32	35	16		H3753614700	36-02	43	3		H3754300060	43	53	1	
H3753204500	32	35	17		H3753624601	36-02	43	6		H3754300600	43	53	23	
H3753207600	32	35	18		H3753632200	36-03	45	26		H3754300601	43	53	23	

silverthorn.co.uk

NUMERICAL PARTS INDEX

PART NO.	GRP NO.	PAGE	REF-NO.
H3754303300	43	53	4
H3754308600	43	53	6
H3754500030	45	55	1
H3754500200	45	55	1 02
H3754500300	45	55	1 13
H3754500500	45	55	1 05
H3754500900	45	55	1 21
H3754501300	45	55	1 09
H3754501300	94-04	117	1 07
H3754501400	45	55	1 10
H3754501400	94-04	117	1 08
H3754501500	45	55	1 15
H3754501600	45	55	1 16
H3754504100	45	55	1 07
H3754504200	46-03	61	27
H3754504600	46-03	61	25
H3754507100	46-03	61	15
H3754507300	46-03	61	21
H3754507400	46-03	61	4
H3754507600	48	67	18
H3754510030	45	55	1
H3754510600	45	55	1 06
H3754510600	94-04	117	1 06
H3754514400	46-03	61	1
H3754514500	46-03	61	26
H3754517200	46-03	61	9
H3754518700	07-02	13	35
H3754520600	45	55	1 06
H3754520600	94-04	117	1 06
H3754520800	45	55	1 08
H3754527200	46-03	61	9
H3754527400	46-03	61	4
H3754527400	46-03	61	32
H3754530400	45	55	1 04
H3754540101	45	55	1 01
H3754600010	46-01	57	9
H3754600500	46-01	57	2
H3754600500	46-01	57	2
H3754600500	94-02	113	1 80
H3754600900	46-01	57	8
H3754601800	46-01	57	7
H3754601800	94-04	117	1 09
H3754603500	46-02	59	8
H3754604400	46-02	59	2
H3754609800	94-02	111	1 65
H3754611200	46-01	57	3
H3754611300	46-01	57	5
H3754613300	46-01	57	13
H3754613300	94-02	111	1 64
H3754614300	46-02	59	1
H3754614600	46-02	59	9
H3754619800	46-01	57	24
H3754619800	94-02	111	1 65
H3754621100	46-01	57	1
H3754621200	46-01	57	3
H3754621700	46-01	57	6
H3754623201	46-01	57	12
H3754623300	46-01	57	13
H3754623300	94-02	111	1 64
H3754703600	46-02	59	20
H3754703800	46-02	59	16
H3754703900	46-02	59	17
H3754704100	46-01	57	19
H3754800030	48	67	16
H3754800900	94-04	117	1 10
H3754803300	48	67	17
H3754803301	48	67	17
H3754807200	46-03	63	35
H3754807201	46-03	63	35
H3754807400	46-03	61	32
H3754807500	46-03	61	2
H3754807600	46-03	61	3
H3754807800	48	67	19
H3754807900	46-03	61	14
H3754807900	46-03	61	14
H3754807900	46-03	65	61
H3754808100	46-03	63	44
H3754808200	46-03	63	43
H3754808300	46-03	63	58
H3754808400	46-03	63	44
H3754808600	46-03	65	66
H3754809100	46-03	63	38
H3754809200	46-03	65	64
H3754817100	46-03	63	33
H3754817300	46-03	63	34
H3754817600	46-03	61	3
H3754818600	46-03	65	66
H3754818700	46-03	65	61
H3754818900	46-03	65	71
H3754820200	94-02	113	1 66
H3754827100	46-03	63	33
H3754827200	46-03	63	35
H3754837300	46-03	63	34
H3755500300	30	31	29
H3755500600	94-02	113	1 68
H3755508500	94-02	113	1 67
H3755510600	30	31	16
H3755510600	07-02	13	45
H3755510600	94-02	113	1 68
H3755518500	94-02	113	1 67
H3756007010	61-03	73	1 01
H3756101602	61-06	83	18
H3756101800	61-01	69	7
H3756103300	61-03	73	1 07
H3756103700	61-06	83	17
H3756104100	61-06	83	1
H3756107700	61-03	73	1 16
H3756108501	63	89	22
H3756108501	63	91	53
H3756108800	61-06	83	25
H3756109300	61-03	73	1 08
H3756109800	36-03	45	13
H3756110700	61-01	69	9
H3756110701	61-01	69	9
H3756111900	61-01	69	29
H3756112000	61-03	73	1
H3756113500	61-02	71	1
H3756113600	61-02	71	2
H3756116300	61-03	73	1 09
H3756116600	61-03	73	1 10
H3756116800	61-06	83	24
H3756116800	94-02	113	1 69
H3756121100	61-01	69	1

silverton.co.uk

NUMERICAL PARTS INDEX

PART NO.	GRP NO.	PAGE	REF -NO.		PART NO.	GRP NO.	PAGE	REF -NO.		PART NO.	GRP NO.	PAGE	REF -NO.	
H3756123800	61-06	83	5		H3756305800	63	89	10		H3759423230	94-01	109	1	
H3756124300	61-06	83	8		H3756305801	63	89	10		H3759423240	94-01	109	1	
H3756126400	61-03	73	1	11	H3756306700	63	89	36		H3759432110	94-04	117	1	
H3756133200	61-01	69	15		H3756309500	63	91	48		H3759432120	94-04	117	1	
H3756134200	61-06	83	7		H3756315400	63	91	46		H3759432130	94-04	117	1	
H3756142900	61-01	69	24		H3756315700	63	89	24		H3759433210	94-01	109	1	
H3756143100	61-01	69	14		H3756316700	63	89	36		H3759433220	94-01	109	1	
H3756146500	61-03	73	1	12	H3756316800	63	91	45		H3759433230	94-01	109	1	
H3756146700	61-03	73	1	13	H3756319500	63	91	48		H3759433240	94-01	109	1	
H3756152800	61-01	69	23		H3756326800	63	91	45		H3759433250	94-01	109	1	
H3756162800	61-01	69	23		H3756329500	63	91	48		H3770708500	07-02	11	28	
H3756167013	61-03	73	1	14	H3756405100	61-01	69	22		H3770709300	30	31	2	
H3756176100	61-03	73	1	15	H3756405200	61-01	69	22		H3770717200	43	53	12	
H3756202800	61-02	71	9		H3756600500	66	93	1		H3770717200	94-03	115	1	03
H3756203100	61-02	71	15		H3756600500	68-01	95	2		H3771102200	11	15	16	
H3756203300	61-02	71	13		H3756807500	68-01	95	3		H3771112200	11	15	16	
H3756203400	61-02	71	16		H3756807600	68-01	95	4		H3773303800	36-03	45	39	
H3756204900	61-01	69	36		H3757101500	71	99	6		H3773303900	32	35	10	
H3756210111	62-02	87	1	04	H3757101600	71	99	8		H3774046100	40	49	1	03
H3756211100	62-01	85	6		H3757110100	71	99	1		H3776103601	61-02	71	17	
H3756215900	61-02	71	14		H3757110300	71	99	3		H3776127400	63	89	37	
H3756220201	62-01	85	1		H3758704202	87	101	6		H3776305500	63	89	19	
H3756221200	62-01	85	7		H3758704403	87	101	17		H3776306400	63	89	16	
H3756237100	61-02	71	3		H3759000200	90-01	103	7		H3786204400	61-01	69	37	
H3756237200	61-02	71	4		H3759000300	90-01	103	8		H3786300400	63	91	50	
H3756237300	61-02	71	5		H3759003700	32	35	30		H3786300500	63	91	49	
H3756237400	61-02	71	6		H3759010200	90-01	103	7		H3786300600	63	91	51	
H3756237500	61-02	71	7		H3759010300	90-01	103	8		H3786311100	63	91	55	
H3756237600	61-02	71	8		H3759013100	90-01	103	11		H3786320210	63	89	9	
H3756247100	61-02	71	3		H3759013200	90-01	103	12		H3786330210	63	89	9	
H3756247200	61-02	71	4		H3759013400	90-01	103	13		H3789000900	68-01	95	9	
H3756247300	61-02	71	5		H3759200200	46-01	57	16		H3789200600	90-01	103	10	
H3756247400	61-02	71	6		H3759200500	90-01	103	5		H3789201100	32	35	27	
H3756247500	61-02	71	7		H3759201600	90-01	103	1		H3789201200	32	35	26	
H3756247600	61-02	71	8		H3759210100	90-01	103	9		H3789201300	32	35	31	
H3756260100	62-02	87	1		H3759210900	63	91	54		H3789201400	32	35	32	
H3756300800	87	101	4		H3759300300	07-02	13	56		H3789210200	13	17	13	
H3756300900	63	89	35		H3759302100	04	5	29		H37A4801600	46-03	63	36	
H3756305300	63	91	43		H3759310300	07-02	13	56		H37A4802200	46-03	61	16	
H3756305600	63	89	26		H3759400400	94-03	115	1		H37A4802200	46-03	61	16	
H3756305601	63	89	26		H3759401300	94-02	113	1	81	H37A4802200	46-03	65	62	

silverton.co.uk

NUMERICAL PARTS INDEX

PART NO.	GRP NO.	PAGE	REF -NO.	PART NO.	GRP NO.	PAGE	REF -NO.	PART NO.	GRP NO.	PAGE	REF -NO.
H37A4802300	46-03	61	17	H4750033100	43	53	16	H4820222500	61-04	75	1 20
H37A4802300	46-03	61	17	H4750033100	63	91	52	H4820222800	61-04	75	1 23
H37A4802300	46-03	65	63	H4750033100	07-02	11	21	H4820223400	61-04	75	1 29
H37A4802400	46-03	61	18	H4750033100	94-02	113	1 85	H4820223800	61-04	75	1 32
H37A4802400	46-03	61	18	H4750033100	94-03	115	1 05	H4820228100	61-04	75	1 07
H37A4802400	46-03	65	64	H4750033700	87	101	17	H4820229100	61-04	79	1 82
H37A4802401	46-03	61	18	H4750034100	87	101	24	H4820233600	61-04	75	1 31
H37A4802700	46-03	63	37	H4750036601	87	101	16	H4820233900	61-04	75	1 33
H37A4802800	46-03	63	38	H4750036700	87	101	23	H4820234000	61-04	75	1 28
H37A4802900	46-03	63	39	H4750039900	63	89	5	H4820235900	61-04	75	1 08
H37A4802901	46-03	63	39	H4750055701	63	89	2	H4820239100	61-04	79	1 82
H37A4812300	46-03	61	17	H4750060400	46-01	57	22	H4820244000	61-04	75	1 28
H37A4812800	46-03	63	38	H4750256701	90-02	105	11	H4820253100	61-04	79	1 91
H37A4831600	46-03	63	36	H4800096600	63	89	21	H4820801061	61-04	79	1 87
H37A5500100	30	31	17	H4800096600	61-04	75	1 27	H4820801400	61-04	77	1 52
H4106302200	94-02	113	1 70	H4802004900	61-04	75	1 42	H4820802061	61-04	79	1 88
H4123203900	32	35	29	H4820202300	61-04	75	1 18	H4820810301	61-04	77	1 51
H4123203900	94-03	115	1 12	H4820202600	61-04	75	1 21	H4820810400	61-04	77	1 53
H4123204100	32	35	28	H4820202900	61-04	75	1 24	H4820811200	61-04	77	1 50
H4247410400	43	53	27	H4820203300	61-04	79	1 93	H4820820101	61-04	77	1 49
H4263109500	30	33	41	H4820204500	61-04	75	1 38	H4820830700	61-04	77	1 56
H4263109600	30	33	42	H4820204600	61-04	75	1 39	H4820850500	61-04	77	1 54
H4263109600	94-03	115	1 18	H4820204700	61-04	75	1 40	H4820850600	61-04	77	1 55
H4529820800	63	91	44	H4820204800	61-04	75	1 41	H4821000030	61-04	75	1 12
H4560042901	46-01	57	18	H4820205200	61-04	77	1 43	H4821010201	61-04	75	1 02
H4568050200	62-01	85	5	H4820205500	61-04	77	1 46	H4821010300	61-04	75	1 03
H4568950401	90-02	105	7	H4820205800	61-04	75	1 26	H4821035600	61-04	75	1 16
H4568950401	90-02	105	13	H4820207100	61-04	77	1 74	H4823005100	61-01	69	19
H4573464300	46-02	59	18	H4820207600	61-04	75	1 22	H4823005100	61-04	77	1 79
H4573464301	46-02	59	18	H4820211700	61-04	75	1 13	H4823020100	61-04	75	1 01
H4573551100	13	17	14	H4820212200	61-04	75	1 17	H4823020101	61-04	75	1 01
H4576475201	32	35	28	H4820212400	61-04	75	1 19	H4825005300	61-04	77	1 48
H4594030200	63	89	39	H4820213200	61-04	79	1 89	H4825005600	61-04	77	1 45
H4595104024	90-02	105	10	H4820213500	61-04	79	1 85	H4825005601	61-04	77	1 45
H4595104030	90-02	105	6	H4820214100	61-04	75	1 34	H4825005700	61-04	77	1 44
H4595430100	07-02	13	43	H4820214200	61-04	75	1 35	H4825005800	61-04	77	1 47
H4730203501	62-01	85	17	H4820214300	61-04	75	1 36	H4825006100	61-04	77	1 49
H4730205502	62-01	85	17	H4820214400	61-04	75	1 37	H4825006201	61-04	77	1 50
H4730206300	90-01	103	6	H4820221201	61-04	75	1 10	H4825006600	61-04	77	1 51
H4730209300	62-01	85	18	H4820221300	61-04	75	1 11	H4827001900	61-04	75	1 15
H4730213500	62-01	85	17 01	H4820222200	61-04	75	1 17	H4827011800	61-04	75	1 14

silverhorn.co.uk

NUMERICAL PARTS INDEX

PART NO.	GRP NO.	PAGE	REF-NO.	PART NO.	GRP NO.	PAGE	REF-NO.	PART NO.	GRP NO.	PAGE	REF-NO.
H4827014100	61-04	75	1 09	H5177603000	63	89	40				
H4827020010	61-04	75	1 06	H5831303100	36-03	45	3				
H4827300000	61-04	75	1	H5831303100	61-06	83	13				
H4828600001	61-04	75	1	H6265201800	32	35	10				
H4829100301	61-04	79	1 84	H6430915300	91	107	1 22				
H4829107030	61-04	79	1 83	H66E4604200	61-01	69	41				
H4829123010	61-04	79	1 83	H7092101470	66	93	1 26				
H48A1501000	61-04	75	1 12	H7231200090	66	93	1 07				
H48A1600100	61-04	75	1 15	H7233510080	66	93	1 06				
H48A1708100	61-04	77	1 71	H7237500020	66	93	1 17				
H4916223200	33	37	1 11	H8242001900	42	51	13				
H4916251100	94-02	113	1 71	H9126207700	63	89	14				
H4918114003	32	35	2	H9126700201	91	107	1 23				
H4918114004	33	37	1 26	H9136503200	63	89	17				
H4918121100	33	37	1 03	H9144604200	63	89	41				
H4918121600	33	37	1 04	H9410401100	25-02	29	10				
H4918122200	33	37	1 02								
H4918122300	33	37	1 10								
H4918122500	33	37	1 08								
H4918122600	33	37	1 09								
H4918122600	94-02	113	1 72								
H4918122700	33	37	1 20								
H4918122700	94-02	113	1 73								
H4918123100	33	37	1 12								
H4918123500	33	37	1 21								
H4918123700	33	37	1 22								
H4918142100	33	37	1 07								
H4918142230	33	37	1 13								
H4918142300	33	37	1 06								
H4918142400	33	37	1 05								
H4918203270	33	37	1								
H4918209040	33	37	1 01								
H4918211550	33	37	1 28								
H4918214405	33	37	1 27								
H4918219300	33	37	1 14								
H4918225210	33	37	1 15								
H4918230230	33	37	1 18								
H4918245060	33	37	1 24								
H4918255240	33	37	1 25								
H4918322800	33	37	1 17								
H4918414000	32	35	13								

silverhorn.co.uk

TABLE OF BOLT, W/WASHER

BOLT,W/WASHER	BOLT/WASHER	BOLT,W/WASHER	BOLT/WASHER	BOLT,W/WASHER	BOLT/WASHER
HF180506010	HF103506010 HF251506000	HF180506035	HF103506035 HF251506000	HF180508018	HF103508018 HF251508000
HF1805-06012	HF103506012 HF251506000	HF180506040	HF103506040 HF251506000	HF180508020	HF103508020 HF251508000
HF1805-06014	HF103506014 HF251506000	HF180506045	HF103506045 HF251506000	HF180508022	HF103508022 HF251508000
HF180506016	HF103506016 HF251506000	HF180506055	HF103506055 HF251506000	HF180508025	HF103508025 HF251508000
HF180506018	HF103506018 HF251506000	HF180506060	HF103506060 HF251506000	HF180508030	HF103508030 HF251508000
HF180506020	HF103506020 HF251506000	HF180508012	HF103508012 HF251508000	HF180508035	HF103508035 HF251508000
HF180506025	HF103506025 HF251506000	HF180508014	HF103508014 HF251508000	HF180508040	HF103508040 HF251508000
HF180506030	HF103506030 HF251506000	HF180508016	HF103508016 HF251508000	HF180508045	HF103508045 HF251508000

silverhorn.co.uk

TABLE OF BOLT, W/WASHER

BOLT,W/WASHER	BOLT/WASHER	BOLT,W/WASHER	BOLT/WASHER	BOLT,W/WASHER	BOLT/WASHER
HF180508050	HF103508050 HF251508000	HF180510018	HF103510018 HF251510000	HF180510050	HF103510050 HF251510000
HF180508055	HF103508055 HF251508000	HF180510020	HF103510020 HF251510000	HF180510055	HF103510055 HF251510000
HF180508060	HF103508060 HF251508000	HF180510022	HF103510022 HF251510000	HF180510060	HF103510060 HF251510000
HF180508065	HF103508065 HF251508000	HF180510025	HF103510025 HF251510000	HF180510065	HF103510065 HF251510000
HF180508070	HF103508070 HF251508000	HF180510030	HF103510030 HF251510000	HF180510070	HF103510070 HF251510000
HF180508075	HF103508075 HF251508000	HF180510035	HF103510035 HF251510000	HF180510085	HF103510085 HF251510000
HF180510014	HF103510014 HF251510000	HF180510040	HF103510040 HF251510000	HF180512016	HF103512016 HF251512000
HF180510016	HF103510016 HF251510000	HF180510045	HF103510045 HF251510000	HF180512020	HF103512020 HF251512000

silverhorn.co.uk

TABLE OF BOLT, W/WASHER

BOLT,W/WASHER	BOLT/WASHER	BOLT,W/WASHER	BOLT/WASHER	BOLT,W/WASHER	BOLT/WASHER
HF180512025	HF103512025	HF180512065	HF103512065	HF182506010	HF103506010
	HF251512000		HF251512000		HF251506000
					HF250006000
HF180512030	HF103512030	HF180512085	HF103512085		
	HF251512000		HF251512000	HF182506012	HF103506012
					HF251506000
HF180512035	HF103512035	HF180514035	HF103514035		HF250006000
	HF251512000		HF251514000		
				HF182506014	HF103506014
HF180512040	HF103512040	HF180514045	HF103514045		HF251506000
	HF251512000		HF251514000		HF250006000
HF180512045	HF103512045			HF182506016	HF103506016
	HF251512000				HF251506000
					HF250006000
HF180512050	HF103512050				
	HF251512000			HF182506020	HF103506020
					HF251506000
HF180512055	HF103512055				HF250006000
	HF251512000				
				HF182506025	HF103506025
HF180512060	HF103512060				HF251506000
	HF251512000				HF250006000

silverhorn.co.uk

TABLE OF BOLT, W/WASHER

BOLT,W/WASHER	BOLT/WASHER	BOLT,W/WASHER	BOLT/WASHER	BOLT,W/WASHER	BOLT/WASHER
HF182506030	HF103506030 HF251506000 HF250006000	HF182508025	HF103508025 HF251508000 HF250008000	HF182508050	HF103508050 HF251508000 HF250008000
HF182506035	HF103506035 HF251506000 HF250006000	HF182508030	HF103508030 HF251508000 HF250008000	HF182508055	HF103508055 HF251508000 HF250008000
HF182506055	HF103506055 HF251506000 HF250006000	HF182508035	HF103508035 HF251508000 HF250008000	HF182508085	HF103508085 HF251508000 HF250008000
HF182508012	HF103508012 HF251508000 HF250008000	HF182508038	HF103508038 HF251508000 HF250008000	HF182510014	HF103510014 HF251510000 HF250010000
HF182508016	HF103508016 HF251508000 HF250008000	HF182508040	HF103508040 HF251508000 HF250008000	HF182510016	HF103510016 HF251510000 HF250010000
HF182508020	HF103508020 HF251508000 HF250008000	HF182508045	HF103508045 HF251508000 HF250008000	HF182510020	HF103510020 HF251510000 HF250010000

silverhorn.co.uk

TABLE OF BOLT, W/WASHER

BOLT,W/WASHER	BOLT/WASHER	BOLT,W/WASHER	BOLT/WASHER	BOLT,W/WASHER	BOLT/WASHER
HF182510025	HF103510025	HF182512025	HF103512025	HF200510016	HF115510016
	HF251510000		HF251512000		HF251510000
	HF250010000		HF250012000		
				HF200510020	HF115510020
HF182510030	HF103510030	HF182512030	HF103512030		HF251510000
	HF251510000		HF251512000		
	HF250010000		HF250012000	HF200510025	HF115510025
					HF251510000
HF182510035	HF103510035	HF182512040	HF103512040		
	HF251510000		HF251512000	HF200510030	HF115510030
	HF250010000		HF250012000		HF251510000
HF182510040	HF103510040			HF200510035	HF115510035
	HF251510000				HF251510000
	HF250010000				
				HF200510040	HF115510040
HF182510080	HF103510080				HF251510000
	HF251510000				
	HF250010000			HF200510045	HF115510045
					HF251510000
HF182512020	HF103512020				
	HF251512000			HF200510050	HF115510050
	HF250012000				HF251510000

silverhorn.co.uk

TABLE OF BOLT, W/WASHER

BOLT,W/WASHER	BOLT/WASHER
HF200510055	HF115510055 HF251510000
HF200510060	HF115510060 HF251510000
HF200510065	HF115510065 HF251510000
HF200510070	HF115510070 HF251510000
HF200512020	HF115512020 HF251512000
HF200512025	HF115512025 HF251512000
HF200512030	HF115512030 HF251512000
HF200512035	HF115512035 HF251512000

BOLT,W/WASHER	BOLT/WASHER
HF200512040	HF115512040 HF251512000
HF200512045	HF115512045 HF251512000
HF200512050	HF115512050 HF251512000
HF200512055	HF115512055 HF251512000
HF200512065	HF115512065 HF251512000

BOLT,W/WASHER	BOLT/WASHER
HF201510020	HF115510020 HF251510000 HF250010000
HF201510025	HF115510025 HF251510000 HF250010000
HF201510030	HF115510030 HF251510000 HF250010000
HF201510035	HF115510035 HF251510000 HF250010000
HF201510040	HF115510040 HF251510000 HF250010000
HF201510050	HF115510050 HF251510000 HF250010000

silverhorn.co.uk

TABLE OF BOLT, W/WASHER

BOLT,W/WASHER	BOLT/WASHER	BOLT,W/WASHER	BOLT/WASHER	BOLT,W/WASHER	BOLT/WASHER
HF201510055	HF115510055				
	HF251510000				
	HF250010000				
HF201510060	HF115510060				
	HF251510000				
	HF250010000				
HF201512025	HF115512025				
	HF251512000				
	HF250012000				
HF201512030	HF115512030				
	HF251512000				
	HF250012000				

silverhorn.co.uk

S6R-Y1TAA1 **Diesel Engine** PARTS CATALOG

silverhorn.co.uk

Hitachi Construction Machinery Co., Ltd.

9841091940

PRINTED IN JAPAN